SYNERGETIC
SYN AUD CON
AUDIO CONCEPTS

newsletter

VOLUME 9, NUMBER 2
WINTER 1982

P.O. Box 669, San Juan Capistrano, CA 92693
Ph: 714-496-9599

SYNERGETIC
Working together; co-operating, co-operative

SYNERGISM
Co-operative action of discrete agencies such that the total effect is greater than the sum of the two effects taken independently.

EXCHANGE OF IDEAS

I met a man with a dollar	I met a man with an idea
We exchanged dollars	We exchanged ideas
I still had a dollar	Now we each had two ideas

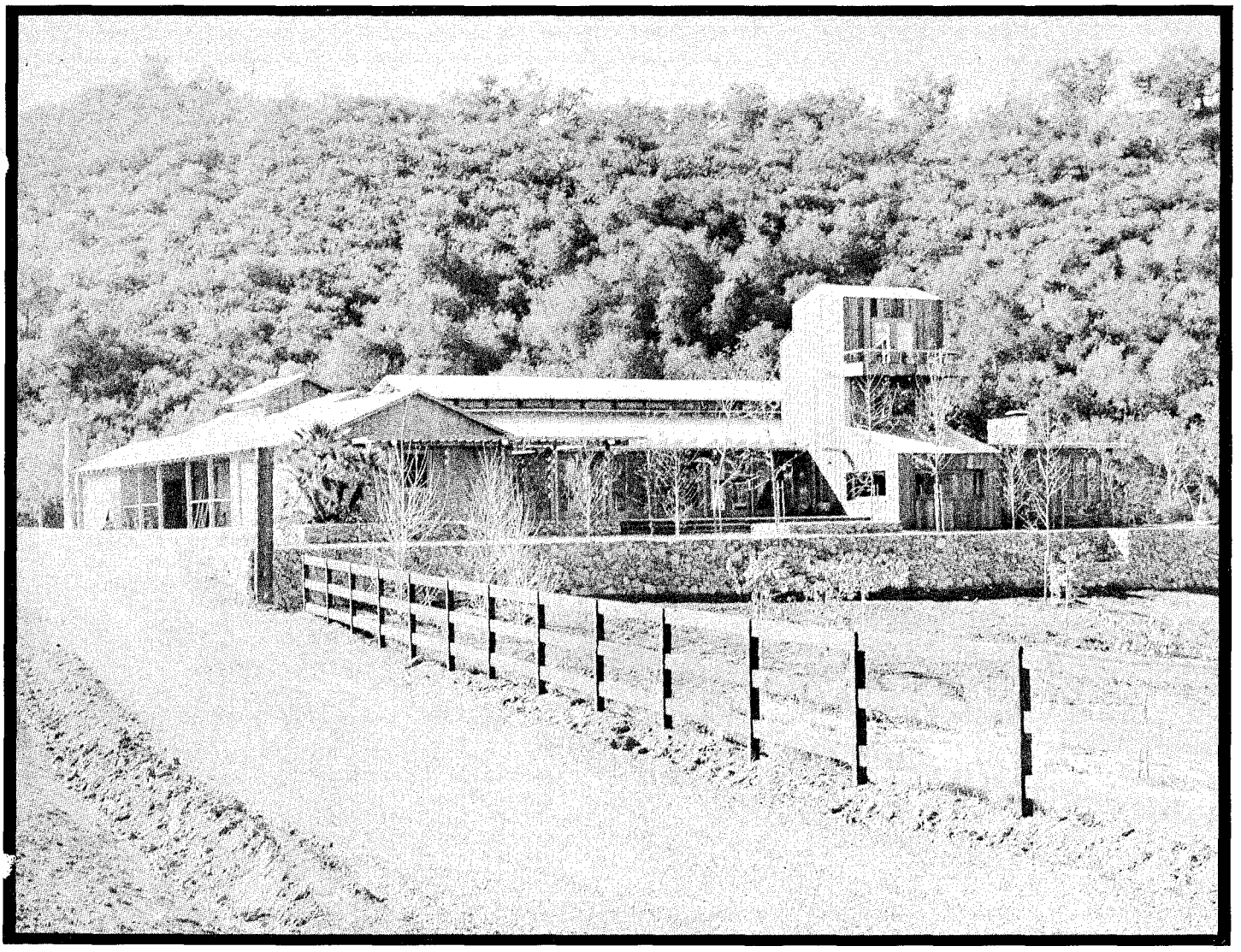

SYN-AUD-CON AUDIO INDUSTRY SEMINAR CENTER

TABLE OF CONTENTS

OUR 10th YEAR

January 1982 marked the beginning of Syn-Aud-Con's tenth year of service to the audio industry. Ours has been and continues to be a unique and privileged experience. Our 4000-plus graduates have represented remarkable individual talents that collectively have become a force to be reckoned with in professional audio. Our sponsors have loyally supported Syn-Aud-Con's efforts in audio education as well as, in many cases, undertaking the pioneer introductory work associated with the products that have sprung from Syn-Aud-Con graduates' synergy of shared ideas.

We take special pleasure that, in the judgment of the vast majority of our peers, Syn-Aud-Con is regarded as having made significant contributions to the world of audio -- both materially and through our philosophy of sharing and growing together spiritually.

Jacob Bronowski, in his book *The Ascent of Man*, had this to say about science: "Science is a very human form of knowledge. We are always at the brink of the known, we always feel forward for what is to be hoped. Every judgment in science stands on the edge of error, and is personal. Science is a tribute to what we can know although we are fallible."

In the science of audio and acoustics we have taken pleasure in all the manifestations of knowledge, used the marvelous tools available to us joyfully, and advanced our understanding of cause and effect humbly. Audio and acoustics are so intimately intertwined with the senses of material man, while simultaneously stimulating the mind and soul, yes, the very spirit of mankind through the avenues of music, poetry, motivational speech and other auditory ways of reaching the myriad facets of our consciousness, that we must acknowledge that art has as strong a claim to our purpose as has science.

Syn-Aud-Con's first decade has proven the effectiveness of the approach. It has gathered the participants, tools and ideas for launching a new era in audio. We suspect that all of us will indeed look back in awe and wonder at what is wrought by all of us in Syn-Aud-Con's second decade.

The Syn-Aud-Con Newsletters and Tech Topics are published quarterly by Synergetic Audio Concepts, P. O. Box 669, San Juan Capistrano, CA 92693. Telephone: (714) 496-9599. The subscription rate for graduates of Syn-Aud-Con seminars is $30 per year in U.S. ($35 in other countries). Newsletter subscriptions are available to non-graduates for $50 per year in U.S. ($55 in other countries). Non-graduate subscribers may credit the $50 subscription rate to the registration fee for a Syn-Aud-Con Sound Engineering Seminar should they register during the year of the subscription.

**Syn-Aud-Con graduates are capitalized throughout Newsletter*

1982 SYN-AUD-CON SEMINAR AND WORKSHOP SCHEDULE

WORKSHOPS

SAN JUAN CAPISTRANO, CA

LEDE™ Control Room Design.....Jan. 19-21, 1982
Engineering Loudspeaker Arrays..Feb. 23-25, 1982
To Be Announced.....April 20-22, 1982
To Be Announced.....Nov. 16-18, 1982

TRAVELING WORKSHOP

To Be Announced.....June, 1982

A DAY WITH SYN-AUD-CON

Montreux, Switzerland.....March 6, 1982

SOUND ENGINEERING SEMINARS

SEMINAR CENTER

San Juan Capistrano, CA.....Feb. 2-4, 1982
San Juan Capistrano, CA.....March 23-25, 1982
San Juan Capistrano, CA.....April 6-8, 1982
San Juan Capistrano, CA.....Oct. 19-21, 1982
San Juan Capistrano, CA.....Oct. 28-30, 1982

TRAVELING SEMINARS

San Francisco Area.....May 4-6, 1982
Salt Lake City Area.....May 12-14, 1982
Minneapolis Area.....May 25-27, 1982
Chicago Area.....Sept. 8-10, 1982
Washington, D.C. Area.....Sept. 15-17, 1982
Nashville Area.....Sept. 28-30, 1982
Orlando Area.....Oct. 6-8, 1982

SPECIAL FEE FOR SYN-AUD-CON GRADUATES

Since our first year of conducting audio seminars, we have endeavored to offer a special price to graduates who come as often as they can to a Syn-Aud-Con seminar. We have worked out a new program which we are pleased with and hope that our graduates will be also:

2nd time to attend a Syn-Aud-Con Seminar. $500
3rd time. $450
4th time. . . . . .$400 minimum

The above pricing does not apply to Syn-Aud-Con sponsored Workshops because we are essentially hosting the Workshops, which are staffed by noted authorities.

When you are registering for a Seminar, note how many times you have attended. We should have records on everyone who has attended, but in case our card file is mis-arranged, this will help.

I don't know who holds the record for having attended a Syn-Aud-Con class the most often, but DAVE ANDREWS of Andrews Audio in New York and DAVID MOORE of Electrocom in Seattle must be close to a tie, having attended 7 or 8 seminars. I don't know that we can claim any credit but they are two of the finest sound contractors in the country.

HP-41C IN CLASS

Each member of a Syn-Aud-Con class works with a HP-41C during the three days. It doesn't take long to get even a partial appreciation of the capabilities of the HP-41C.

Members of the Washington, D.C. class.

Members of the Orlando class.

We are sometimes asked why we don't offer a HP-41C as an option to the price of a Syn-Aud-Con class. We are looking into the possibility now and, if it is feasible, we will do so.

SYN-AUD-CON'S FIRST JAPANESE SPONSOR

Syn-Aud-Con is very pleased to announce that TOA Electronics, Inc., of Japan has become a Syn-Aud-Con sponsor. TOA is dedicated to the professional sound market only, both in Japan and internationally. TOA Electric Company, Ltd., was founded in 1934, which places its age at about the same as the commercial sound industry itself. We were pleasantly surprised, upon meeting with TOA executives in the United States, to find them not only builders of highly regarded sound products but deeply committed to what Syn-Aud-Con feels is a philosophy of marketing that is devoted to the *long term* welfare of professional *sound contractors* here in the United States.

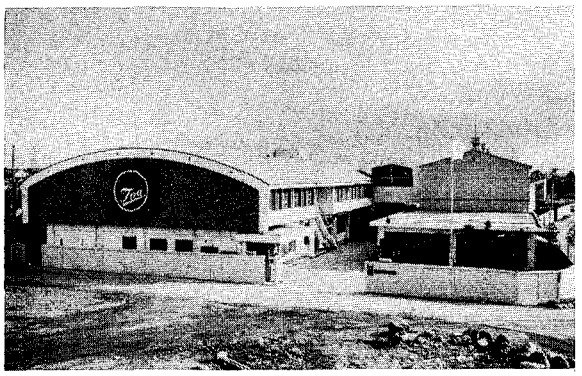

TOA Electric Headquarters - Takarazuka, Japan

In the words of the president and board chairman of TOA, Mr. Taro Nakatani, here briefly is the philosophy of the company. "Since our company was first formed, we have sincerely tried to make a significant contribution to society through quality products. We go about this important task in a rather unique way. First of all, we have mapped out for ourselves three basic areas of concern. They are first, our customers, second, our business associates, and third, our employees. Through total dedication to hard work, we seek the complete confidence of all of these people. Our customers demand quality, our business associates demand scrupulous fulfillment of promises, and our employees demand just remuneration, understanding, and appreciation for their efforts.

"To best sum up the policy that governs all of our corporate activities and to satisfy the expectations of our customers, business associates and employees, there are four words TOA management holds in special esteem: Sincerity, Unity, Reliability, and Courage. You will find these words expressed in every product we manufacture."

As our Syn-Aud-Con graduates have heard from us repeatedly in the past few years, we deplore opportunistic or predatory marketing practices sometimes used by foreign manufacturers in the United States. It's extra refreshing to find an innovative, ethical, well-managed, internationally-minded firm like TOA. Their success proves that those companies who truly seek out a real long term understanding of each market place they desire to enter and adjust to the good practices prevailing there quickly earn the respect of the established businesses they deal with. Such companies reap the profits of a mutually beneficial association between an enlightened manufacturer and their distribution.

We are looking forward to an extremely fruitful relationship with TOA since many of their product philosophies reflect directions we have long felt to be right ideas. We are impressed with the straightforward circuit simplicity many of their products embody and we are interested to observe that they apparently do listen to the constructive advice their distribution supplies them.

Sam Sakata, who has been with TOA for 22 years, heads the United States operation.

We will soon be demonstrating several new TOA products in our regular classes and we'll be reporting on them in future Newsletters. In the meantime, we encourage you to look into the line if you have not, and we know that the large number of you already using TOA are as pleased as we are to have them supporting what Syn-Aud-Con stands for.

TOA has new corporate headquarters in San Francisco. Their new address is P. O. Box 2047, San Francisco, CA 94080.

COMPUTER SOUND SYSTEM ENGINEERING PROGRAMS

If anyone is interested in selling, purchasing or developing sound system engineering programs in any of the languages, KEN WAHRENBROCK will set up a clearing center for listing and assisting coordination of such interests and needs. The details of the program are available. Send a self-addressed stamped envelope and he will send the information by return mail. His address is Wahrenbrock Sound Associates, Ltd., 12115-A Woodruff Avenue, Downey, CA 90241.

IN MEMORIAM: MEL SPRINKLE

MEL SPRINKLE'S name and picture have appeared often in Syn-Aud-Con publications. We always listened intently to anything Mel had to say on technical matters as his depth of study, his clarity of presentation, and his patience with failure on our part to always comprehend made him an inspired teacher.

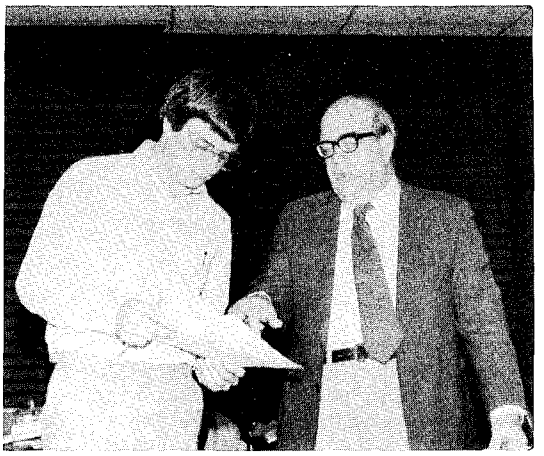

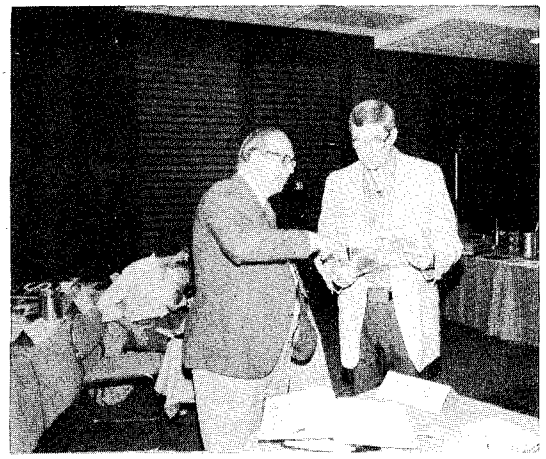

We recently received word that Mel passed on the first of this year. We take solace in having recognized his greatness while he was present. When we told EUGENE PATRONIS about Mel's death, he gave us his philosophy of life:

> Live each day as though you were going to live forever and treat everyone as though you were not going to be here tomorrow.

Mel left so many pioneer footprints in the great audio desert that there is no danger of forgetting him. Syn-Aud-Con salutes the memory of an audio giant who was also one of life's most enjoyable companions.

SYN-AUD-CON RESIGNS FROM NCAC

Syn-Aud-Con has resigned as a member in good standing from the National Council of Acoustical Consultants (NCAC).

This action was taken as the result of a conviction on our part that Syn-Aud-Con could not in good conscience continue its support of NCAC activities or refrain from the right to comment on articles in peer journals by individuals associated with the NCAC.

WHO IS MICROTEL - HOLLAND?

We need to know who Microtel-Holland is. We were told that they were distributed by British Radio Electronics in Florida. During our Florida class, we checked around but could not learn anything about them. We have been told that Microtel has a product that we would be interested in learning more about.

If you can help, please let us know.

COMMUNITY M4™ DRIVER

Once in a very rare while (usually less than once a decade) someone comes along with a new product that is exciting, useful, unique and undeniably clever. Community Light & Sound has accomplished all of this and more with their M4 mid-range compression loudspeaker. After examining the fundamental parameters of the audio spectrum such as:

1. Number of decades
2. Power distribution within those decades
3. The sensitivity of the human ear
4. Psychoacoustic considerations, particularly of distortion components and their audible effects

the Community engineers, Bruce Howze and Clifford Henricksen proceeded to design and construct what Syn-Aud-Con believes will become the most imitated advance in over fifty years of compression drivers.

The M4 is truly an original design from two extremely talented engineers who compliment each other's talent with remarkable synergy.

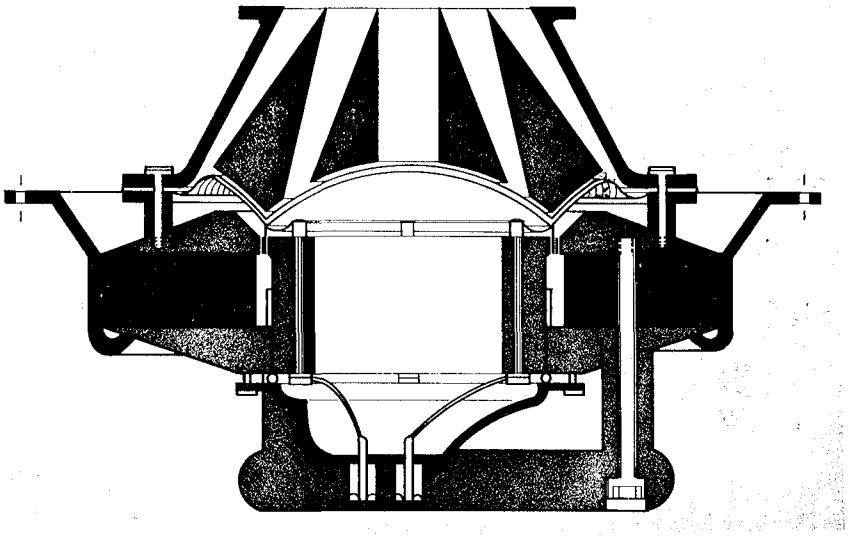

Overall view of M4 driver

Okay, just what's this unit like? Which unit now on the market is it most like? Believe it or not, nothing on the market looks like it, sounds like it, or approaches what it does.

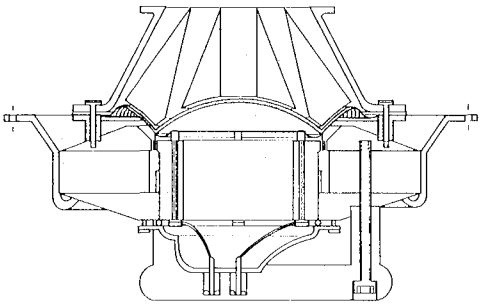

Diaphragm

Utilizing a 7 inch diameter "sandwich" diaphragm (aluminum "skins" with a rigid, low density foam core) capable of ± 0.1 inch of maximum excursion, driven by a 4.5 inch voice coil and coupled to a 4 inch horn throat, this driver delivers 100 *acoustic watts* starting at 200 Hz and going to 2000 Hz (to 4000 Hz with realistic equalization for speech only systems) with a conversion efficiency of 75% at 1000 Hz. It can handle 200 electrical watts at its input.

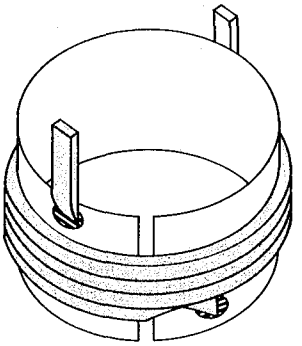

Voice Coil

Community has blossomed forth with some extremely useful and informative data sheets on this driver and we heartily recommend that you write for them:

1. Community Preliminary Catalog Sheet
   M4 Mid-Range Compression Loudspeaker
2. The Community Engineer
   "The Philosophy of M4™"
3. The AES preprint by Bruce Howze and Clifford Hendricksen
   "A High Efficiency, One Decade Mid-Range Loudspeaker"

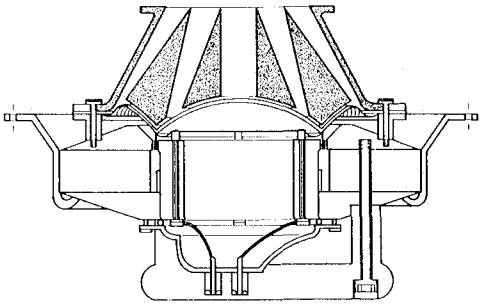

Phasing Plug

Just a little study will reveal the complete innovation present in the design of this driver from its reversal of diaphragm-phasing plug positioning right down to the details of the voice coil winding technique of using the conduction former as an electrical path to avoid "lost" gap width.

WHAT DOES 100 ACOUSTIC WATTS DO FOR YOU?

If you remember our discussions in Syn-Aud-Con classes regarding the acoustic power equation, you'll recall that for a sound source with a Q = 1 the sound power level (L_W) and the sound pressure level (L_P) are approximately equal at 0.282 meters.

Continued next page....

$$L_W = 10 \text{ Log}\left(\frac{100W}{10^{-12}W}\right) = 140 \text{ dB}$$

To find the L_p at four feet (remembering that $L_W = L_p$ at 0.282M) we can write

$$L_W + 20 \text{ Log}\left(\frac{0.282M}{\left(\frac{4ft}{1} \cdot \frac{12in}{1ft} \cdot \frac{2.54cm}{1in} \cdot \frac{M}{100cm}\right)}\right) = 127.31 \text{ dB}$$

for a Q = 1

Therefore, the maximum L_p possible from this unique driver would be

127.31 dB + 10 Log Q

and if someone were to build a high Q constant directivity horn of the Manta-Ray - Keele, et al., type, say with a Q = 70, then

127.31 dB + 10 Log 70 = 145.77 dB

Remember, that's at 4 feet.

Nystagmus anyone?

So far as Syn-Aud-Con is concerned, there hasn't been as fundamental a re-evaluation of loudspeaker design parameters for compression drivers since the days of Wente and Thuras back in the late 1920's at the Bell Telephone Laboratories.

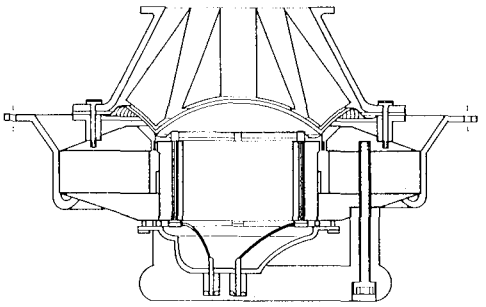

Magnet Assembly

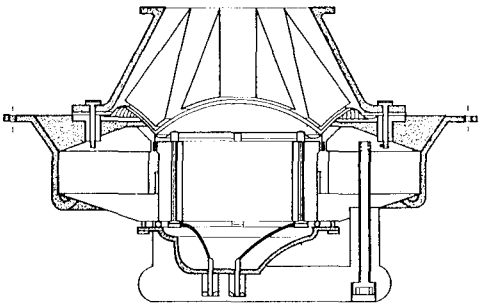

Fiberglass Housing

NEW PLUG INS FOR THE HP-41C AND CV

H.P. is on one of their periodic rampages wherein they effectively clear out otherwise sacrosanct bank accounts -- not theirs -- yours and mine!

This time it's a serial loop interface between the HP-41C series and a host of peripherals. $125 buys the 82160A HP-IL module which plugs into the calculator and allows it to talk to up to 30 devices on one loop.

MASS STORAGE

The 82161A digital cassette drive costs $550 and stores 131,000 bytes on one miniature cassette. This HP-IL-compatible drive has bidirectional access, reading at 9 in./sec and searching at 30 in./sec - AC or battery power.

Again on either battery or AC power is the 82162A 24 column printer/plotter which, among many things, *will print out your program in bar code.* Cost: $495.

The 3468A is a fully programmable 5 function multimeter at $695.

NEW MODULES

Time module	Model 82182A
Extended input/output module	Model 82183A
Extended function/memory module	Model 82180A
Extended memory module	Model 82181A

All of the above are $75 each. What all of these will do would fill considerably more space than this Newsletter.

Wouldn't it be great to have an equivalent of H.P. in Detroit?

CLEVELAND CLASS

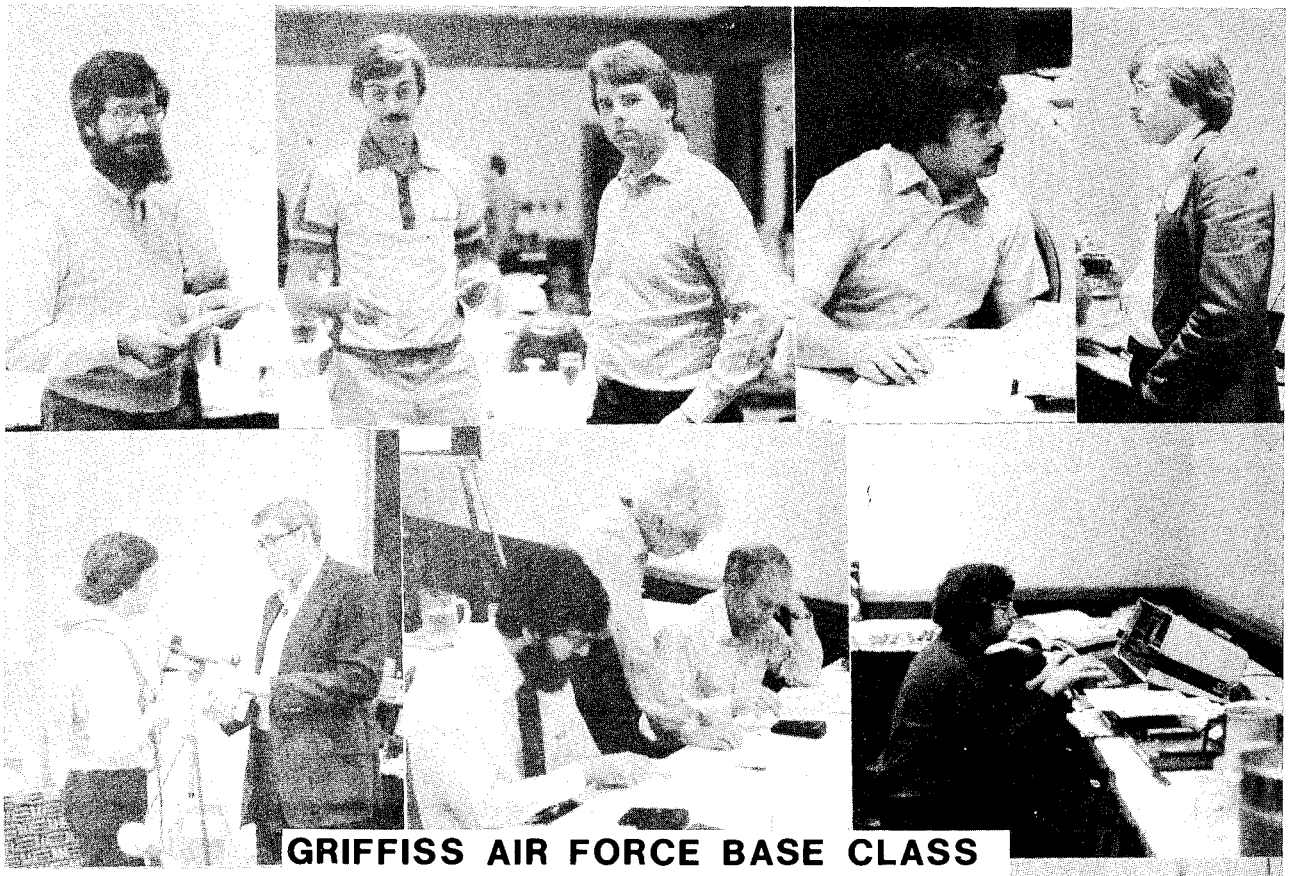

GRIFFISS AIR FORCE BASE CLASS

AROUND THE WORLD IN A SINGLE ENGINE MOONEY - SOLO

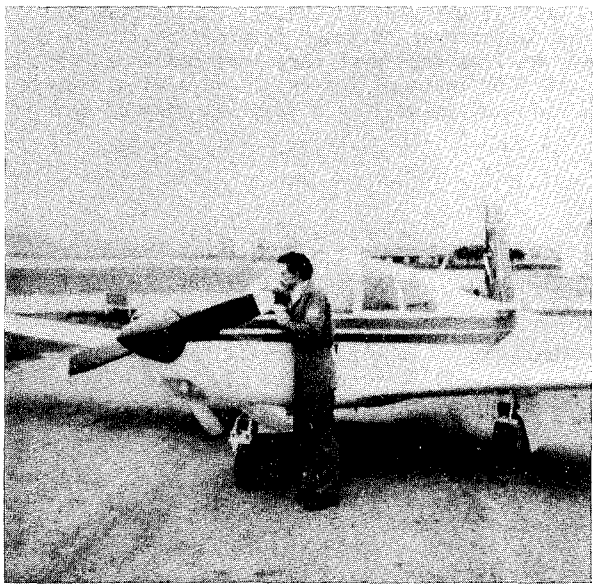

On October 15, 1981, a single engine Mooney aircraft 231 PAPA landed at an airport near Riverside, California, after having been flown solo around the globe by its owner, Manny Mohageri (President of Emilar). No surging crowd awaited his arrival as only close friends and associates knew about his flight. He slipped back into California with as much fanfare as you would receive for a return flight from San Francisco.

Manny left on this magnificent journey on August 15, 1981, from the same airfield. Providence, Rhode Island; Santa Maria in the Azores; Madrid, Spain; Athens; Cairo and then across as troubled an area as the world has to offer to Nairobi in Africa. Then across one of the, to me, more frightening oceans to the Seychelles and on to Madras in India; Singapore; Manila; Guam; Majuro; Honolulu; Hilo and home. You can bet Manny knows most of this globe is covered with water. (How come they call it "earth" anyway? It probably should have been called "sea.")

Few men are ever privileged to experience the sense of freedom planning and executing such an epic journey can generate. Manny weighed his judgements, his skills, and his faith against all the crippling fears that bind ordinary men -- No "what ifs" but plenty of "here's how to."

Some of us would be apprehensive flying his Pacific route in a commercial airliner.

We had to bend Manny's arm to get this map to photograph and persuade him to have a photograph taken of him with 231 PAPA.

We appreciate and understand that he did the trip for himself -- not for publicity or notoriety. But we also feel that sharing just a little in the adventures of those with "the right stuff" uplifts our thought to consider living more and fearing less.

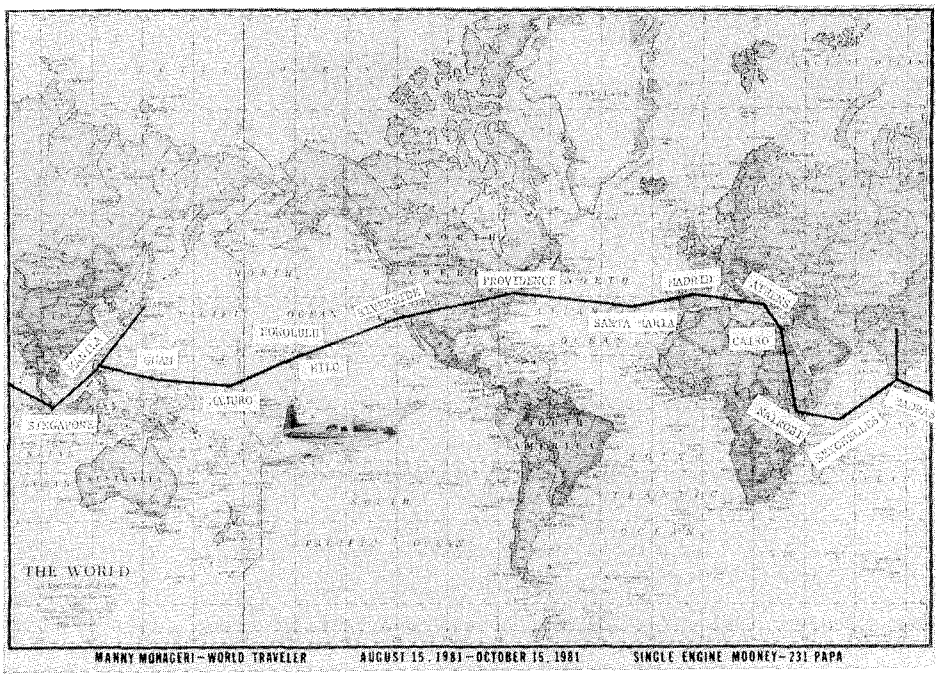

GLEN BALLOU - BOARD OF GOVERNORS - AES

We were very pleased to hear that GLEN BALLOU was elected to the Board of Governors of the Audio Engineering Society (AES). Our thanks to the many Syn-Aud-Con graduates who, along with us, recognized Glen's talents with your votes. Glen has been appointed "Papers Chairman" for the Fall 1982 AES Convention to be held in Anaheim, California.

Bob Davis of Altec is the Fall 1982 Convention Chairman. We feel confident that men of this caliber and with extensive experience in the audio industry are just the men needed to produce an outstanding convention. Ted Uzzle is "Co-Papers Chairman." We believe these men will insure a high level of "papers" quality.

NEW TEF™ LICENSEES

We are looking forward to the issue of the Newsletter in which we list our 75+ TEF™ licensees and turn all future royalty payments to the California Institute Research Foundation over to Crown International. In the meantime, we are grateful to each new licensee as it means there will be that much more information shared. Every time we have an opportunity to talk with heavy users of the TEF™ instrumentation, it is a vital learning experience for us. The upcoming Workshop on LEDE™ control room design will be a feast as many of the instructors and attendees are TEF™ licensees.

The new licensees are:

Mr. Neil A. Muncy
Neil Muncy Associates
315C Howard Avenue
Rockville, MD 20850

Mr. Henry P. Alrich
7095 Comanche Trail
Austin, TX 78732

Mr. Dan Bynum
Klipsch & Associates, Inc.
P. O. Box 688
Hope, AR 71801

Mr. Robert Richards
McClear Place Studios, Ltd.
225 Mutual Street
Toronto, Ont. CANADA M5B 2B4

Mr. John L. Burgoyne, Jr.
Acoustics, Inc.
708 Aurora Boulevard
Quezon City, PHILIPPINES

Mr. Johnny Farmer
4900 Henderson Road
Temple Hills, MD 20748

Dr. Richard C. Cabot
12820 S.W. Washington St.
Beaverton, OR 97005

Mr. J. L. Huffine
Douglas Aircraft Company
3855 Lakewood Blvd.
Long Beach, CA 90846

Mr. Tim Purcell
Purcell Audio
3020 Balboa Street
San Francisco, CA 94121

A COMMON ERROR: THE VU MISUSED

Letter to the Editor
dB Magazine
1120 Old Country Road
Plainview, NY 11803

Dear Sir:

In his otherwise interesting and useful article, "Monitoring program Levels," in the December 1981 *dB* magazine, Jack K. Gordon includes a misstatement:

> "The test tone reference-level for a reading of zero VU is +4 dBm....."

I'm sure what Mr. Gordon meant to say was:

> "The test tone reference level of +4 dBm drives the pointer on a VI meter to an *apparent* reading of zero VU."

Of course, the actual level is +4 VU because the attenuator setting of +4 must be added to the apparent meter reading to obtain the actual VU value.

ANSI C16.5 - 1954 stipulates that a standard volume indicator (VI) consists of two parts: (1) a meter and (2) an attenuator or pad.

Because current VI meters do not include an attenuator (hence, do not truly meet the standard), their manufacturers have adjusted their sensitivity so that 1.23 volts drives the pointer to an apparent reading of zero VU. This is done so that one of the new meters minus an attenuator will have its pointer at the same position on the meter scale as the older meters with their attenuator when both are driven with the same signal. It is necessary, however, to add +4 to the new meter reading to obtain the correct level.

A very interesting reference explaining all of this in greater detail is:

> "What the VU Meter Is/Is Not/Will Be" by Dr. Ronald Gubisch of Weston Instruments in the October 1977 issue of *BM/E* magazine, pages 82-86.

To summarize: a correctly calibrated VI meter will read a total value (pointer value plus any attenuator values present) of zero VU when the test signal is a continuous sine wave 0.775 volts RMS into a 600 ohm load (1 milliwatt) and when the VI meter is bridged across the 600 Ω load.

Sincerely,

Don Davis, SYNERGETIC AUDIO CONCEPTS

COMPARISON OF CONVENTIONAL MIC AND PZM™

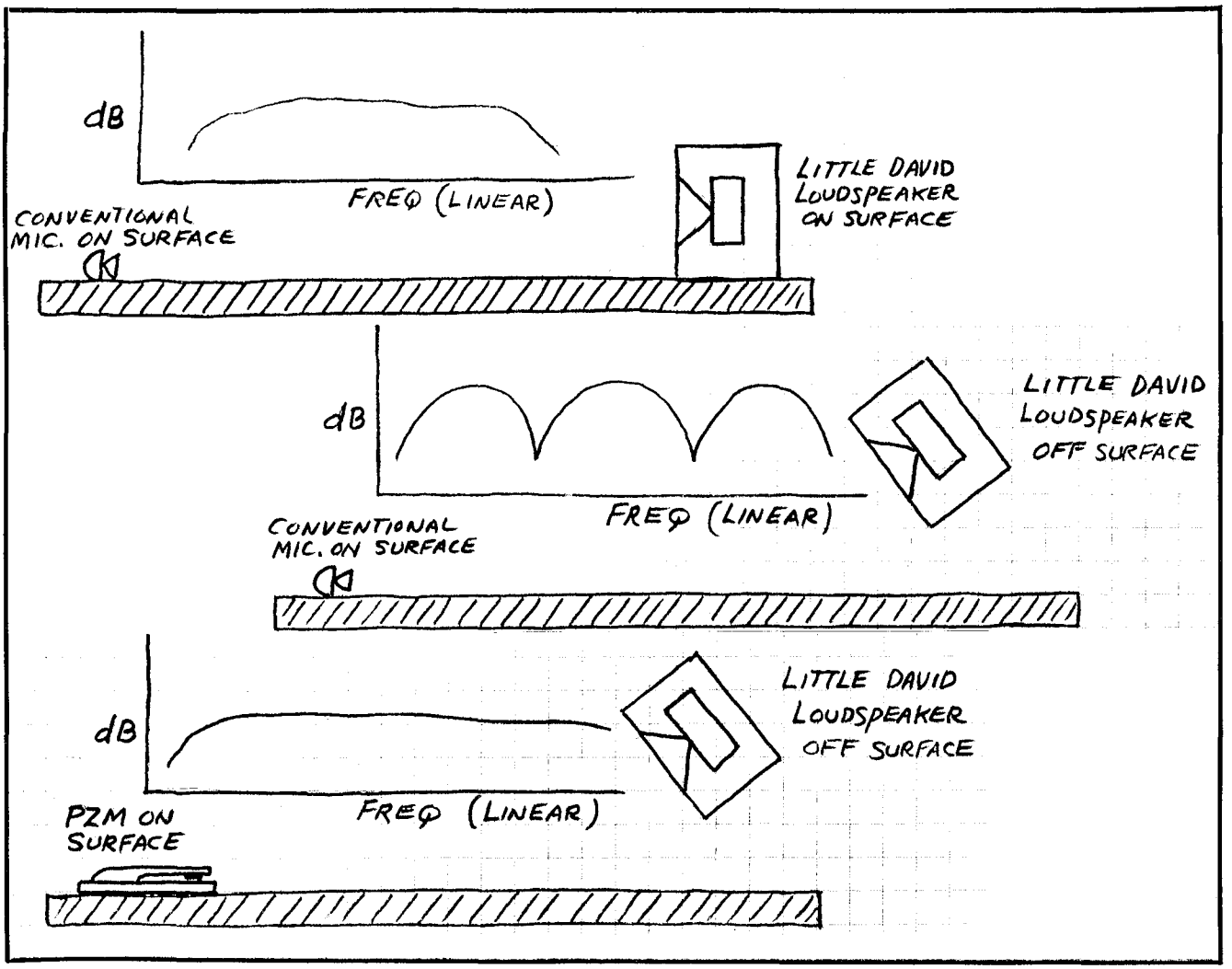

ERRATA

BUILDING AND USING A COMPARATOR BOX

The diagram on page 10 of Newsletter Volume 9, No. 1 (Fall 1981), should have the connections from the switch to the input of the filters reversed. The same should be done at the output of the filters back to the switch. This reversal should occur at the F.I. (filter input) terminals between the terminals and the filters on the input side and at F.O. (filter output) terminals between the filters and the terminals on the output side.

Failure to make these corrections results in unbalanced circuits having the signal passed to the low side.

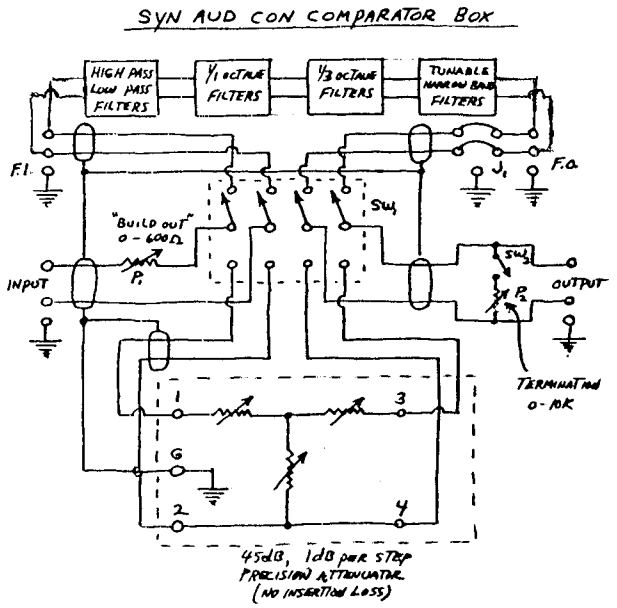

WRITING EQUATIONS FOR COMPUTERS AND TYPEWRITERS

Page 29 of Newsletter Volume 9, No. 1:

$$\bar{a} = 1 - e(\exp)\ (.049V/S \cdot RT_{60})$$

should have read:

$$\bar{a} = 1 - e(\exp) - (.049V/s \cdot RT_{60})$$

ORRERY'S THEOREM

In the mid 1700's an Irish nobleman had an intricate model of the solar system constructed that clearly modeled the then new and exciting discovery of Kepler-Newton, et al. It was a huge model installed in the castle's great hall with the sun at the center and each planet revolving around the sun, turning on their own axes as well, and complete with their own moons, etc.

When the nobleman's athiest friend arrived to see it, he was struck with awe and delight at its intricacies. "Who made it?" was the first question the athiest asked. The nobleman, seeing his chance, replied, "No one, it just happened." The athiest was startled. "What do you mean it just happened. Someone had to have made it?" "No," replied the nobleman. "It just appeared."

After a series of such statements, the nobleman was able to drive home to his friend a great truth that has come to be known as "Orrery's Theorem" (Charles Boyle, the fourth Earl of Orrery - Lord Orrery):

> "If the model of any natural system requires intelligence for its creation and its working, the real natural system requires at least as much intelligence for its own creation and working."

To successfully and properly test something requires, first, the intuitive sensing of just what is truly happening in the first place so that the human mental model you conceive of can be constructed with meaningful parameters you can now measure for compliance or lack of compliance with the expected behavior. Most discoveries, so called, spring from the flash of new unsought understanding that illuminates consciousness while it's staring abjectly at data that crushes cherished preconceptions.

The best way to approach physical science or God is "with fear and trembling."

WHITE HOUSE COMMUNICATIONS

Here are two young men who are involved in an adventurous life of travel, exposure to celebreties and endless audio challenges. They are White House Communication personnel and their job is to see that the President of the United States can be heard clearly and loudly by all he wishes to reach. We greatly enjoyed having PAT McFADDEN and BILL CASS in our recent Dallas class.

ARTIFICIAL REVERBERATION

Artificial reverberation system designers are just beginning to cope with the initial time delay gap, Kuttruff effect, and density and diffusion in the generation of "natural" sounding artificial reverberation.

BM/E magazine, in their October 1981 issue, had an article on this subject which contained a great deal of subjective descriptions such as:

> "In the decay period, the number of repeats must increase sharply, and they should come closer and closer together for a great 'density' and diffuseness. This is the basis for a smoothly powerful sound."

and:

> "A good test for the density and randomness of the early reflections is a sharp hand clap or a drumbeat. Poor performance on the early reflections will produce something like a machine gun, or like an acoustic flutter -- the results will not please the ear."

One look at an ETC display in a live room reveals about 10^3 times more understanding of this subject than anyone has been able to verbalize as yet. Once these engineers learn the difference between reverberation and early fields (we rarely meet one who can correctly define what a reverberant sound field is), we expect much progress to be achieved by their acknowledged *circuit* wizardry.

WASHINGTON D.C. CLASS

THE WICKED REPS OF THE WEST

As Syn-Aud-Con starts its tenth year of service to the audio industry, Sunwest Marketing's two lady proprietresses begin their second successful year. Eunice and Shelley represent several good manufacturers including three Syn-Aud-Con sponsors: HME, Community Light and Sound, and Emilar.

The photograph was taken on Halloween at the AES Convention in New York City this past fall. Robert Young, in the picture with Don and Carolyn and the Wicked Reps, is Director of Engineering at Plantronics in Santa Cruz, CA.

It would seem that Eunice's and Shelley's manufacturers are not only enriched through their repping but bewitched as well.

PZM™ PROTOTYPES

Pictured here are a sampling of PZM™ prototypes that KEN WAHRENBROCK brought along on the Fall 1981 Syn-Aud-Con tour. Evident are

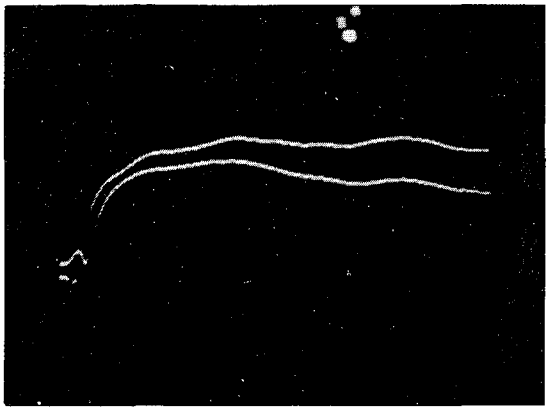

Front to back ratio of prototype handheld.

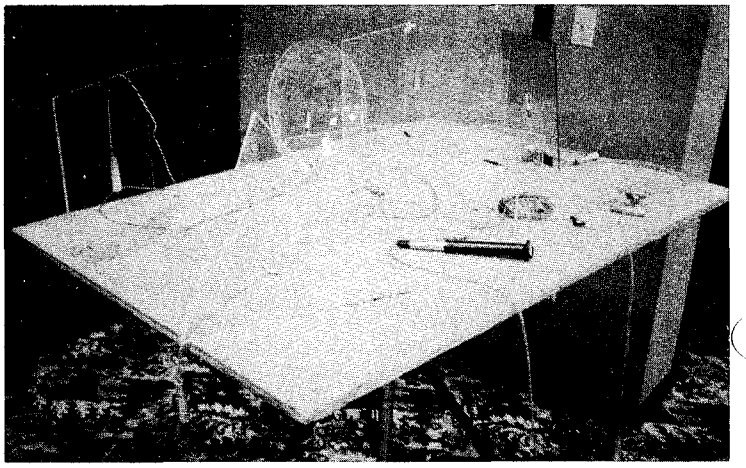

New Prototypes.

corner microphones, pyramid microphones, dish microphones, and a PZM™ handheld.

The ingenuity and innovative flair of Ken Wahrenbrock is present here in this table of evidence. Ken has an orientation that looks at problems as opportunities for discovering solutions rather than as obstacles to excuse further action. Ken's corner PZM's have a hitherto unheard of 45 dB of front to back separation clear across our TEF™ analyzer screen.

As Carolyn and I drove along in our Foretravel motorhome, Ken drove our Dodge van, towing his "Prowler" travel trailer. We used CB radios to talk back and forth to each other (the squelch set so high we didn't know anyone else was on the air). Ken gave us the following message one day as we drove along somewhere in the deep South:

"God put man on earth to use things and love people, not to use people and love things."

SYN-AUD-CON HP-41 PROGRAM LIBRARY & USERS CLUB

JOHN LANPHERE, Chairman of the Syn-Aud-Con HP-41 Program Library, has completed the initial documentation for the first HP-41C audio programs and has issued a premier issue of the "AUDIO 41" Newsletter. We have made this first edition one of our Tech Topics. You will also find an order form to join the club if you have not already done so.

We were impressed to read the list of the first 100 members -- it's a Syn-Aud-Con "Who's Who." John Lanphere is assisted by KEN WAHRENBROCK, RUSSELL BERGER and FARREL BECKER.

THE DAVIS "S" SERIES SPEAKERS

J. W. Davis & Company in Dallas, Texas, has informed us that at long last they are licensed to sell the unusual truncated sphere loudspeaker systems we have been demonstrating in recent Syn-Aud-Con classes. This small, powerful system has several interesting properties. The geometry of the enclosure plays a key role, though at this time unspecified, in the power handling capabilities. If you have not seen or heard one of these units, you are in for a surprise.

The first test we recommend is to hook them up to a good quality 200 watt amplifier and turn up the level until you just begin to detect audible distortion. We believe you'll be surprised at the acoustic output that this small device produces. The pictures show Ken and Don demonstrating these units in class and various listeners looking over the device afterwards.

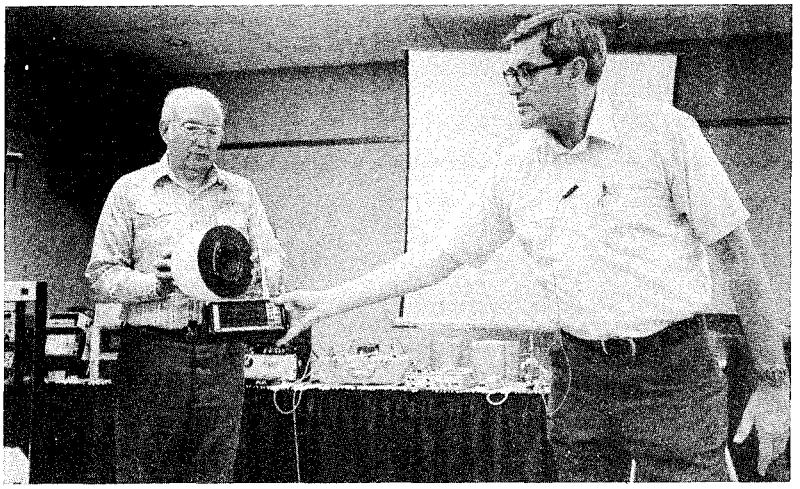

Syn-Aud-Con suggests that you may want to order the 5" model (DS500), the one we have demonstrated in class. J. W. Davis & Company sells the DS500 for the very fair price of $29.90. We would like to hear from those Syn-Aud-Con graduates who order the DS500 sphere.

P.E.P.S

P.E.P.S stands for The Professional Entertainment Production Society, P. O. Box 998, North Hollywood, CA 91603.

P.E.P.S is an organization spearheaded by Stan Miller of Stanal Sound, recognizing the need for professionals in the sound and lighting industry to have a place to exchange information. "It is the aim of the Society to accurately relate the views of the working road technician." Dues range from $500 for a company (voting) to $25 for a student (non-voting).

IN MEMORIAM: HARVEY FLETCHER

Tribute written by Mark Gardner, published in the *AES Journal*, September 1981. Edited for publication here.

Harvey Fletcher

Harvey Fletcher, eminent scientist and engineer, died July 23, 1981, at the age of 96. A trail-blazing investigator of the nature of speech and hearing, Dr. Fletcher was known for his significant contributions in music, acoustics, electrical engineering, speech, atomic physics, motion pictures, and education.

As a graduate student at the University of Chicago, he participated in an experiment with Professor Robert A. Millikan to isolate a single electron and measure its charge. Instead of using tiny atomized water droplets to determine the charge as Millikan attempted, Fletcher's approach was based on the use of atomized oil. The importance of this achievement was recognized when Millikan received the Nobel Prize. This fundamental research contributed to the field of electronics, which led to the development of the radio and television industry. Fletcher was graduated summa cum laude with a Ph.D. from the university in 1911.

In 1916 he accepted an invitation from Frank Jewett, head of research at Western Electric in New York City, to join the company doing research in sound. While there his genius was recognized and he was appointed director of physical research when the company became Bell Telephone Laboratories. During his career at Bell he published 51 papers and two books, *Speech and Hearing*, and *Speech and Hearing in Communication*, both considered major treatises on the subject.

In 1933 he and his group of scientists and assistants were the first to demonstrate stereophonic sound transmission and stereophonic recording (1939). He worked with conductor Leopold Stokowski in 1939 in a concert given at Carnegie Hall featuring stereophonic recording.

He was a co-founder of the Acoustical Society of America and became its first president. In appreciation of his leadership, he was made an honorary member--an honor at that time shared only with Thomas Edison.

President of the American Physical Society, he also received the Progress Medal Award from the American Academy of Motion Pictures in Hollywood. U.S. President Harry Truman honored him with a Certificate of Merit in 1948. For his distinguished work in the field, Fletcher received Gold Medals from the Audio Engineering Society, the Acoustical Society of America, and the Society of Motion Picture and Television Engineers.

Fletcher had more than 20 patents in his name and wrote numerous papers published in professional journals dating from 1911 to 1965. He received honorary doctorate degrees from six universities. Yet, all these are only a small sampling of the many achievements of this remarkable man.

Perhaps his greatest tribute is that his writings are still profitable to read in 1982.

THE ASCENT OF MAN

I can hardly imagine a less attractive "come-on" than the one printed on the front of Jacob Bronowski's *The Ascent of Man*:

> "The spectacular national best seller from the television series seen by more than two million people weekly"

Those identical words would serve to announce a sex novel or the peep show viewpoint of some heinous crime. Therefore, all the greater my surprise and delight when I accidentally saw a single episode of the series on a hotel room television set and found that Jacob Bronowski had constructed an intellectual experience that tempted me for the very first (and I might add only) time to reconsider my position on television as an insidious mind numbing electronic drug. As a result, I purchased the book since my previous experience told me that the book is always more accurate, minus visual distraction, and paced to allow deeper thoughts about the subject to develop. Indeed, the book does allow all that *but* Bronowski is an inspired teacher who even on television touches your mind rather than your brain and soon has you totally unaware of Bronowski but highly sensitized to the ideas that have literally molded mankind.

I cannot recommend too highly that you purchase a copy of this book, read it from cover to cover, and then find an educational channel that is re-running the series and watch them. You'll come away, I hope, with the feeling I did - "We're not here to worship what is known but to question it" - and Bronowski's final thought in the book is to add to the above - "fearlessly."

TRAVELOGUE

Have you ever wondered what it's like to pack a ton of equipment in a large van, hook a travel trailer to it, and follow Syn-Aud-Con's Foretravel diesel motorhome from the Mexican border to the Canadian line, from the Pacific Ocean to the Atlantic seaboard, and from upstate New York to the Florida Cape? KEN WAHRENBROCK did just that and gave a large number of you a chance to see how the wide variety of PZM™ models came into being in his thought.

"On the road" classes this last year started with one in Vancouver, B.C., Canada. After we returned from Canada, we journeyed north again to Santa Cruz, California, to conduct a special class for Plantronics. After a special class at the Seminar Center for WED (Walt Disney) personnel, we packed up our gear in August for an extended fall tour on the road. Our West Coast Seminar Center has a high proportion of Syn-Aud-Con graduates in attendance. The "on the road" classes ran about 90% newcomers to the family. Syn-Aud-Con can now offer genuine variety to our graduates:

A. Become acquainted with us through one of our "on the road" seminars.

B. Attend a seminar at our West Coast Seminar Center for a completely different perspective on Syn-Aud-Con.

C. Attend one of our special graduate seminars taught by leading authorities in selected special fields in audio and acoustics.

Our first fall class was in Denver, Colorado. A memory of mines, myths, Weatherby 460's, and a terrific class.

It was on to St. Louis, Missouri, via the Lake of the Ozarks where we wrote a Newsletter surrounded by water and beauty. Was Carolyn happy in St. Louis? one guess.

Next stop, after an interlude at our farm in Southern Indiana - Chicago, Illinois. This year they garnered the distinction of being our largest class as well. Many from the broadcast industry were represented in the class. This class contributed some really valuable ideas such as Cleon Well's suggestion to reduce the level 3 dB on split loudspeakers. Ken, Carolyn and I were challenged to do our best when faced with the intense interest evidenced here.

Continued next page.....

Eastward toward Cleveland, Ohio, via Elkhart, Indiana, home of the Crown TEF™ project.

In Cleveland we had a beautiful young couple, Mr. and Mrs. JUAN CARLOS LOPEZ GARCIA, from Spain. They had just finished their university programs in Madrid.

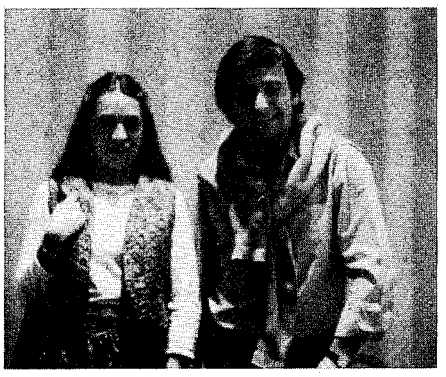

Mr. and Mrs. Juan Carlos Lopez Garcia

David Clark

DAVID CLARK and ED WOLFRUM from Detroit are involved in a wide variety of audio and acoustic projects ranging from a "Double Blind Comparator" to a very exciting variable time delay we are using in our current "alignment" demonstrations. Ed Wolfrum is a man with our appreciation of what's important in life and who doesn't take it for granted.

Ed Wolfrum

We then made our annual call on FLOYD COOPER in Greensville, Pennsylvania. Floyd is an exceptionally talented electrical engineer and a many-time graduate starting in 1973.

Thanks to DAN LEE of Musi-Call in Chicago allowing us to rearrange our commitment to his IBMA association convention in Phoenix (with a major benefit to them as Bruce Wardin of Phoenix, Arizona, became their speaker), we were able to schedule a special class at the Griffiss Air Force Base for communication personnel stationed there. Griffiss is a strategic air command base (SAC doesn't always mean Synergetic Audio Concepts).

The photograph of Ken Wahrenbrock and JIM McCARTHY shows a man both of us have to look up to.

Ken and Jim McCarthy

We used an unusual arrangement for us during this class with the participants seated around an immense conference table. The sign does not refer to advertisements .

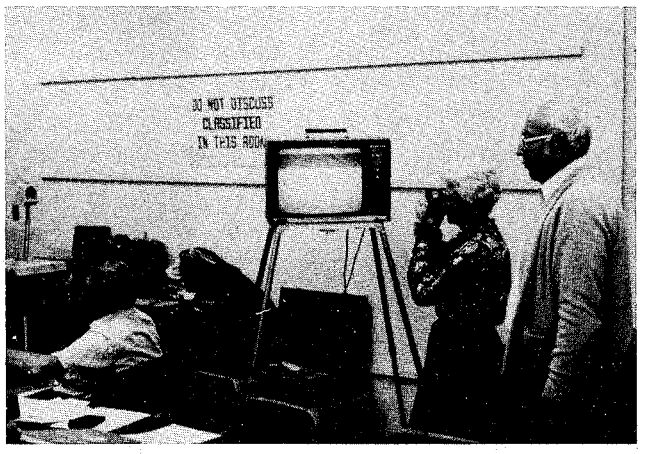

Near Syracuse we visited our friends, the PHIL CLARKS, long-time supporters of Syn-Aud-Con, who have in their home thousands of books, a huge organ, piano, ancient Swiss music box, ad infinitum and hundreds of acres of beautiful land on the lake.

Continued next page.....

TRAVELOGUE continued

Heading south after first experiencing some 20°F nights in upstate New York, we stopped over to see Community Light & Sound in Philidelphia and to be astounded by their M4 mid-range driver (see writeup in this Newsletter). Late that evening we arrived at Gettysburg, Pennsylvania, and the next day introduced Ken to a sacred and revered national monument. The three days at Gettysburg were toured in the motorhome and Ken was soon as highly involved in gathering books and articles on the area as we are. Few Americans can stand uninvolved on this field of honor.

From Gettysburg we headed further south to our Washington, D.C., class. (We felt at home there with our California license plates as we figured they'd had time to get used to westerners by now.) FARREL and GINA BECKER and the late MEL SPRINKLE all had dinner with us the night before the class opened.

Leaving Punch (our cat) with Carolyn's oldest brother in Arlington, Virginia, we proceeded to store the travel trailer and motorhome so we could dare the wilds of New York City in our Dodge van and a rented car. New York City was our second largest class on this tour and included DAVE KLEPPER and BILL STORM of Syracuse University Audio Archives. HARRISON KLEIN of Westinghouse Broadcasting Company, who wrote the excellent Tech Topic, "What We Found When We Measured Telephone Line Impedances," Volume 8, No. 10, was also present. We stayed over for the opening days of the New York AES convention and once again hosted Dr. Diamond among others in our Syn-Aud-Con suite at the Waldorf (Judy enjoyed her stay at the Waldorf). Syn-Aud-Con graduates were much in evidence, both as workers making the AES function as well as speakers, exhibitors and visitors.

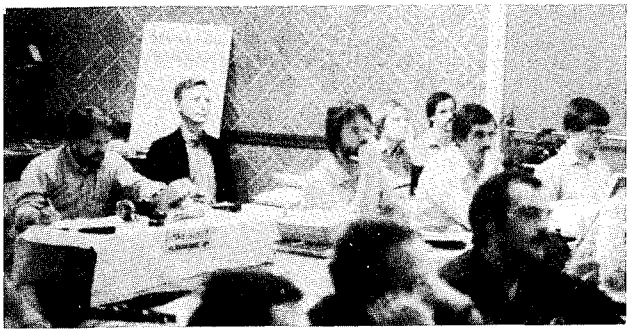

Five classes in five weeks is a full schedule and we quickly dropped south about 300 miles and 200 years to Williamsburg, Virginia, to recuperate. The IRS should have had a quick ride out of town on a rail by our revolutionary ancestors.

Atlanta, Georgia - land of pecans and Carter. On the positive side, the area has produced some real innovators in audio including DR. EUGENE PATRONIS, DUKE MEWBORN and Freddie Pharo of Delta to name just a few. Carolyn took special pleasure in personnel from the Air Force Band as did Ken in showing them the latest PZM™ ideas not yet marketed as regular products.

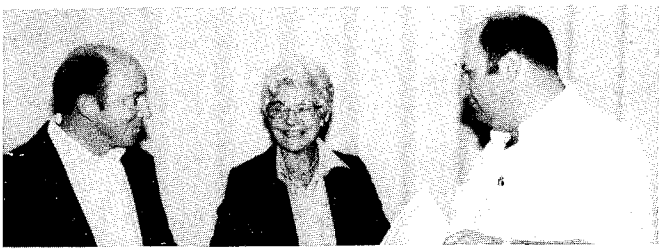

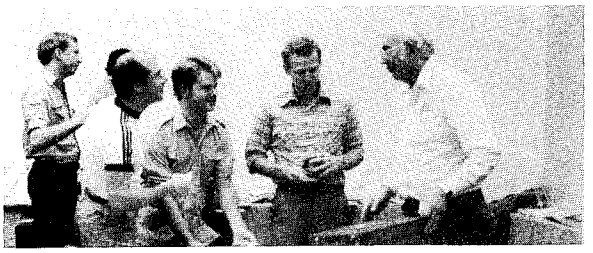

On the way to Orlando, Florida, we pulled the motorhome onto the ocean at Flagler's Beach and Carolyn got a refreshing sea breeze for an extended weekend. The Orlando class, like our West Coast classes, can eat lunches outside. ALAN PERRY of Washington, D.C., works the White House regularly with sound for TV and motion picture projects and told many interesting sidelights about his work.

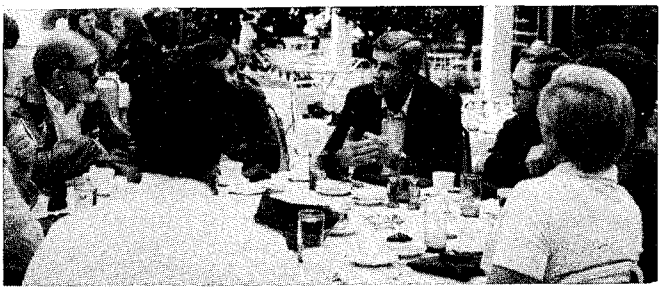

Continued next page.....

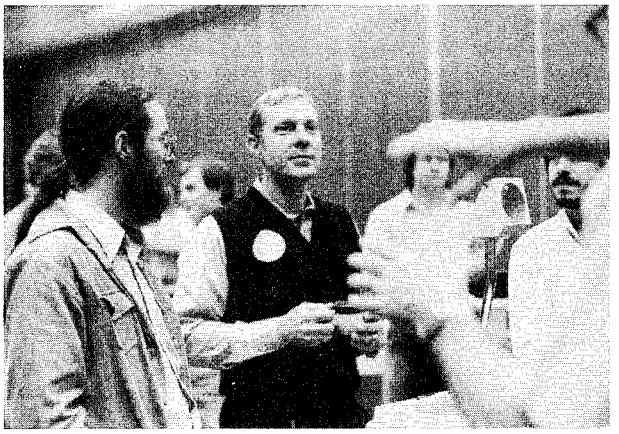

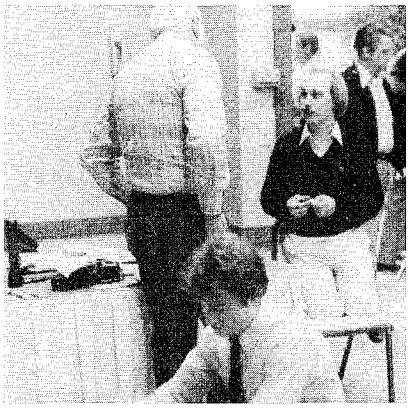

A quick visit to Melbourne Beach (just south of the cape) and then the delightful trip along the gulf coast via Biloxi, Mississippi, New Orleans, Baton Rouge, Houston and on to Dallas, Texas.

The Dallas class had two men from the White House Communications group, STEVE SIMPSON, III, a boon companion for any adventure in Texas, and RUSS BERGER, the LEDE™ control room designer.

The trip back to California included a visit to J. W. Davis & Company facility in Dallas, San Antonio (to attend the annual Wild Game Dinner as guests of the Simpsons), and then on through Junction, Sonora and El Paso to Phoenix. Phoenix to Rancho Carrillo and 1981 was nearly complete. What did we do to relax after this four month trip on the road? You guessed it - we traveled 2000 miles in the van so we could go skiing at Sun Valley, Idaho. But we did make it home by January 1, 1982, ready to start an exciting second decade with Syn-Aud-Con.

SYN-AUD-CON WORKSHOPS

As we write this Newsletter, two fully booked Syn-Aud-Con Workshops are being prepared for January and February. The LEDE™ Control Room Design Techniques Workshop will be held January 19-21, 1982. Staff members include Don Davis, Chips Davis, Russ Berger, Glenn Meeks, Bill Putnam and Ron McKay. During our absence on the road from August to December 1981, further work has been done on the Seminar Center facilities so that we now have available an exceptionally equipped meeting space exceeding even the first class facilities we had last year.

It is believed by many that these special workshops at our Seminar Center represent the ultimate audio educational experience in our industry today.

If we ever had any reservations about voicing such praise of our activities, they were removed as we saw the classroom material being prepared by Dr. Eugene Patronis of Georgia Tech who heads up the staff for our February 23-25, 1982, Engineering Loudspeaker Arrays Workshop. He will be assisted by an outstanding staff including Dave Klepper, Ted Uzzle and John Prohs. Dr. Patronis has organized a learning experience simply unavailable anywhere else in the world. This workshop is, we believe, destined to "write the book" on array design.

Both of these Workshops are, at this writing, fully booked with waiting lists. Why, then, are we still writing about them at this late date? It's because we want to know from you, our readers, what interest there might be in repeating each of these workshops at a later date. If you tell us of your interest, you will be the first to be notified of a scheduled workshop (ahead of the general mailing).

We are currently working on the details of a workshop on "Microphones and Remote Recording for Broadcast" which we expect to be held on location about mid-year. We'll make the announcement in the next Newsletter.

SPLIT SPEAKERS? REDUCE ONE CHANNEL 3 dB

We have often declared in our classes that "once you start looking at a problem accurately, the solution to it is usually not far behind." For the past several years we have been demonstrating with our TEF™ instruments the drastic comb filtering that occurs when you use two loudspeakers split on either side of a stage. Just a matter of inches off of the center line (i.e., a difference in path length between two loudspeakers of just a few inches) causes dramatic losses of acoustic energy at the listener's ears due to phase cancellation.

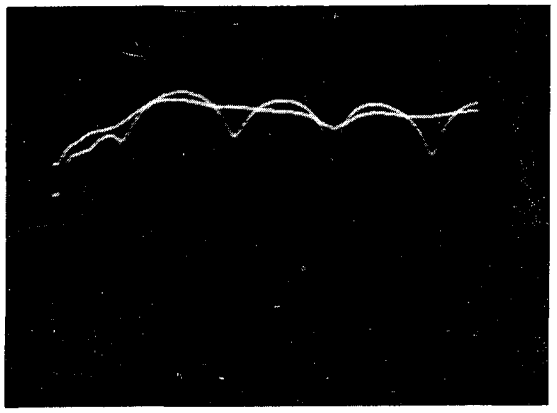

The trace showing the comb filters is the direct sound pressure typical of a large listener area to one side of the center line. The smooth trace is the direct sound level when one of the two loudspeakers has its output lowered by just 3 dB.

When we stack and splay, there is an area of violent combing. Reduce the level on the upper speaker by 3 dB and the curve smooths dramatically.

Note that cancellation is not power lost to the reverberant sound field but a drastic drop in the level of the direct sound field at the listener's ears. This means that these comb filters cause a serious variation in the ratio of direct-to-reverberant sound since only the direct sound level is affected.

Cleon Wells of Chicago Recording.

The above photographs reveal a surprisingly simple way to modify this situation. The bottom trace in each case is the direct sound response chosen as typical for a large listener area to one side of the center line. The upper trace is the direct sound level *when one of the two loudspeakers has its output lowered by just 3dB*. Now the sole poor listening position is that one that is 3 dB further away from the louder loudspeaker than it is from the lower level loudspeaker and the signal again arrives at the listener's ears at equal levels. But now the area where this occurs is much smaller and not in your primary audience area.

CLEON WELLS of Chicago Recording suggested this technique as a quick, readily available remedy. Cleon says this also works when you're trying to mix two stereo signals for mono rebroadcast. Simply mix one channel 3 dB down and the violent vertical component is tamed.

We have demonstrated this in numerous classes since the Chicago class and it works.

ADJUSTING SOUND POWER LEVELS AT REFERENCE

The sound pressure level (L_p) is equal to the sound power level (L_W) when the sound source is omnidirectional ($Q = 1$) and the measurement is made at 0.282 meter plus a small correction factor that adjusts for the effect of temperature and barometric pressure.

$$L_W - 10 \text{ Log}\left[\sqrt{\frac{^{\circ}F+460}{527}}\left(\frac{30}{B}\right)\right] = L_p$$

$^{\circ}F$ is the temperature in degrees Fahrenheit

B is the barometric pressure in inches of mercury (Hg)

If the temperature is $67^{\circ}F$ and the barometric pressure is 30 inches of Hg, then the correction factor equals zero.

ATLANTA CLASS

ST. LOUIS CLASS

DAN WOOLEY

DAN WOOLEY is an experienced authority on the management of large concert halls. He is an expert on bringing them from the ground up to a properly staffed, efficiently operating, artistically satisfying whole. This was Dan's second time through the class and, as usual, he started us thinking on several new ideas for which there is abundant artistic evidence not as yet reduced to numbers and dimensions.

When we arrived home, we found a bundle of invaluable data Dan had sent concerning Ted Schultz's work in evaluating existing concert halls. In comparing some of Schultz's data with recent measurements of our own in a major hall, we were interested to see that between 1979 and 1981 reverberation times had dropped nearly one half second, apparently due to interior remodeling in the years between readings. What this suggests to me is:

1. Make your own measurements rather than relying on early data.

2. Most concert halls lower their reverberation time with age due to interior redecoration.

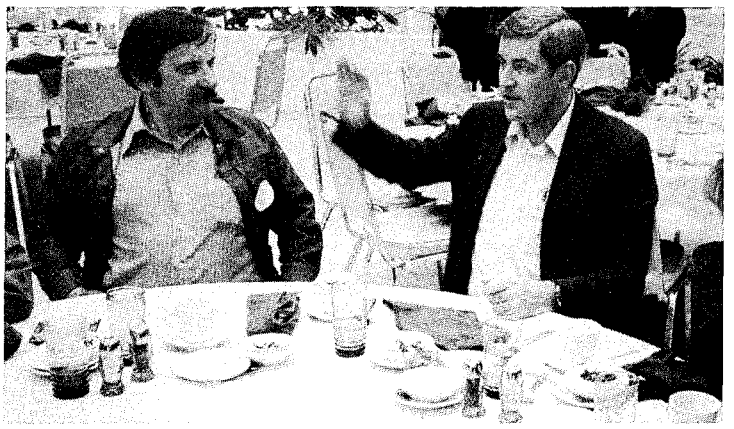

Dan Wooley seated on Don's left.

Florida is one of the few places where we can have our lunch outdoors in the winter, though we had magnificent weather for our first winter in our new Seminar Center.

SUBJECTIVE EVALUATIONS OF REVERBERATION

All of us have been in rooms that "felt live" and in other rooms that "felt dead" in terms of their acoustic decay.

Often times, upon making actual measurements in such rooms, we are surprised to find that what we judged a very reverberant room measures relatively low in RT_{60} and, on occasion, rooms judged not too "live" turn out to have a higher RT_{60} than our ears would have led us to suspect.

The advent of the energy time curve (ETC) analyzers has given us the opportunity to evaluate such parameters in greater detail than was formerly possible. We now see clearly:

1. The direct sound level

2. The initial time delay gap

3. The first reflection's level

4. Each subsequent reflection's level and relative time of arrival in relationship to the first reflection

5. The density of the reflections after a given time interval

6. The signal (reflections) to noise, both ambient and reverberant, ratio as a function of time

Just a little experience in observing these relationships reveals that a subjective sense rarely detects the density of the reflections or, in other words, the reverberant sound field as such. Minute changes in the initial time delay gap and in the relative levels of the first half dozen reflections and their temporal separation spawn immediate subjective response.

Unusual distribution of absorptive materials can lead to unexpected psychoacoustic effects. For example, a high architectural acoustic modifier (M_a) in the form of a highly absorptive audience area into which the loudspeaker is carefully directed so that extremely small amounts of its output fall outside the absorptive area (such as when you are not covering the whole audience so almost all of your output falls on absorption) leads to a subjective sense of a much lower RT_{60}. True, there is less energy released to the hard surfaces of the room but the RT_{60} stays the same even if the *level* of the reverberant sound field is lowered significantly. But this effect also usually causes an entirely different *first reflection* initial time delay gap *and* a different level as well.

Syn-Aud-Con feels that one of the greatest areas of investigation in acoustics today lies right here. The tools are at hand and all that is required is a careful, thorough study of a large series of subjective responses to various "live" environments coupled to the detailed ETC measurements of the space. The difficult part comes when your data contradicts the most worshiped theorems of eighty-plus years.

EARTH TESTERS

The James G. Biddle Company of Plymouth Meeting, Pennsylvania 19462 are manufacturers of "earth testers." Earth resistivity, measured in ohm-centimeters (ohm-cm) and resistance to ground measured in ohms are the subject of a Biddle publication called "Getting Down to Earth" - "A Manual on Earth--Resistance Testing for the Practical Man."

We found this booklet and the Biddle catalog a wealth of information on how to improve grounds, measure grounds, and what earth resistance can tell you about soil corrosion and the need for cathodic protection. The illustration shown here is typical of the approach used in this informative booklet.

EXAMPLE OF AN ELECTRICAL CIRCUIT WITH TOO HIGH AN EARTH RESISTANCE

BY OHMS LAW THERE WILL BE A CURRENT OF 100 AMPERES THROUGH THE FAULT (FROM THE MOTOR FRAME TO THE EARTH)

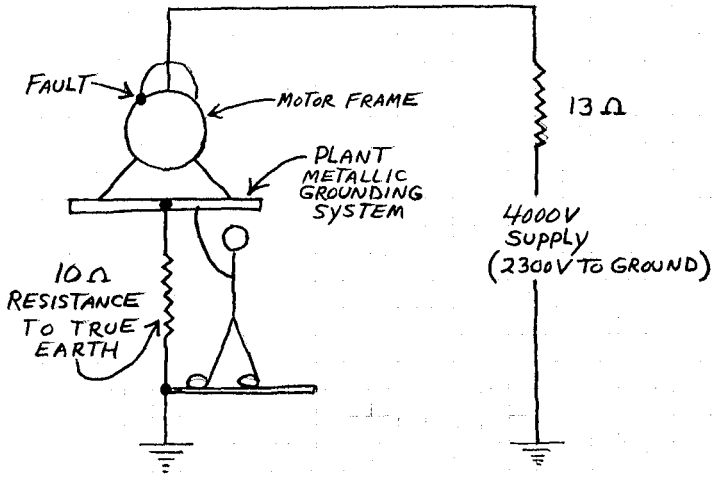

IF YOU HAPPEN TO TOUCH THE MOTOR FRAME WHILE GROUNDED SOLIDLY (STANDING IN A PUDDLE) YOU COULD BE SUBJECTED TO 1000 VOLTS (10Ω x 100A)

IF THE RESISTANCE TO TRUE EARTH WERE 1Ω YOU'D ONLY RECEIVE 100 VOLTS

DAVID CLARK - INNOVATIVE SYN-AUD-CON GRAD

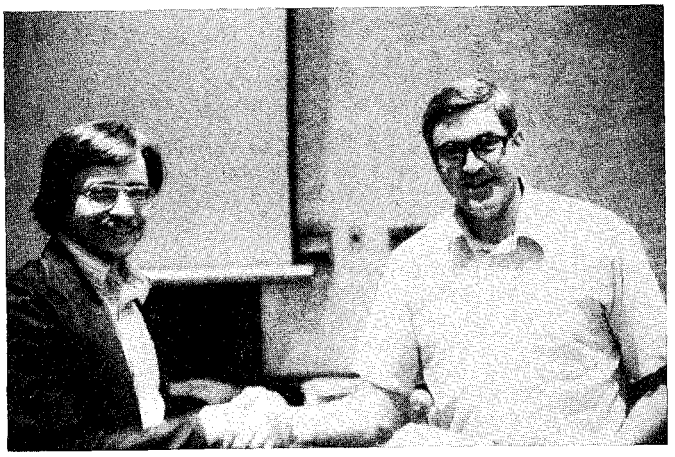

Pictured is DAVID CLARK and Don at the Conclusion of the Cleveland class. Dave has developed a "double blind" tester for use in evaluating audio components. (Dave also developed the variable time delay we are using so dramatically in the very latest classes to align out-of-alignment loudspeaker systems.)

As expressed in Newsletter Volume 9, No. 1, page 10, we have genuine doubts regarding the use of double blind testing and Dave has taken elaborate measures to negate many of the problems. In any case, we found Dave to be a sincere, dedicated audio researcher trying to "push the audio envelope" out just a little further. In our opinion, when we can find the Rosetta stone that allows clear communication between people like Dr. Diamond at one end of the scale and David Clark at the other end, we'll be on our way to new audio discoveries. Objective testing is the most difficult feat in the world because to conceive of a test requires a *belief* that the test is possible and meaningful. Many times the real result of the test is to find out that it is none of the above.

UNIQUE USE OF A SHURE M267

Michael S. Pettersen of Shure Brothers has sent in an idea with immense appeal to those doing church sound systems. We'll let Michael's letter tell you the details. He is Assistant Marketing Manager of Circuitry Products at Shure Brothers and is involved with our favorite mixer, the M267.

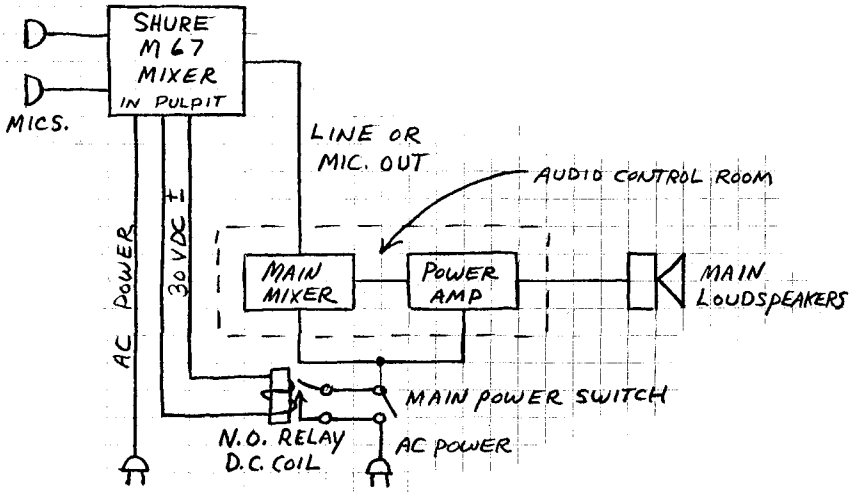

I would like to share an idea with other graduates; it is in regard to sound installations in churches. An increasing number of churches are installing sophisticated audio systems. These systems are often designed to provide sound reinforcement, recording capability, and broadcast capability. On the Sabbath, the resident audio technician fires up the system and, God willing, everything works. But pity the poor pastor, rabbi, or priest who must perform a wedding on Wednesday evening and needs to use the system for sound reinforcement. He probably has trouble tuning in his television; and when confronted by the multitude of knobs and switches in the church's audio control room, the confused clergyman falls to his knees and prays for a Doctorate in Electrical Engineering.

Consider the following solution for this common dilemma: When designing the sound reinforcement section of a church system, plan to power the mixing board, equalizers, power amplifiers and other reinforcement equipment from a single ac source that can be controlled by one switch. Bridge this switch with a normally open relay that has a coil rated for 24 volts dc and that does not draw more than 10 milliamps. This relay is controlled by the dc jacks on the back of a Shure M67 or M68FC Mixer. The mixer is mounted in a convenient spot at the front of the church, perhaps in the pulpit. The output of the mixer feeds a preset input on the main mixer. Now, all the pastor has to worry about is a volume control or two and one on/off switch. His prayers are answered. This idea has been used successfully by various sound installers across the country and, simple though it is, this system seems like a minor miracle to many men of the cloth.

GROUND CONDUCTIVITY IN THE U. S.

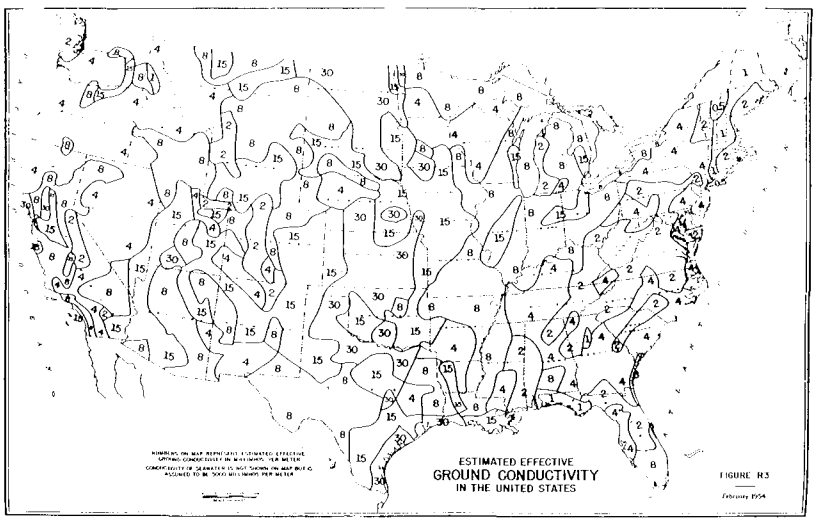

The map shown here is of the "Estimated Effective Ground Conductivity in the United States." Conductivity of seawater is assumed to be 5000 millimhos per meter. The mho is the unit of conductivity and is the reciprocal of the ohm. Thus, a conductivity 5000 millimhos per meter is the same as a 1/5 = .20 ohms per meter.

Along the Southern California seacoast, we have 15 millimhos per meter or 1/.015 = 66.67 ohms per meter.

FTC MEASUREMENT OF SPEAKERS

Remembering that the time dispersal behavior deliberately built into horns should vary as a function of angle off axis and as a function of frequency*, the data being generated by those taking frequency time curve (FTC) measurements is of fundamental interest. Obviously, true time alignment requires a network that adjusts relative acoustic emission times by frequency. This, on occasion, has been approximated where natural physical misplacement was played against the phase change with frequency of a crossover network in a manner that brought the resultant relative phase with changing frequency to a uniform value.

GLENN MEEKS of Sound Investments in Indianapolis is one of the most active users of Heyser's TDS-ETC measurements. (We call the measurements Time Energy Frequency, TEF™.) Glenn sent us the following important data:

Here are copies of FTC measurements I've made of various speakers.

A description of the method developed for FTC measurements is given below and is based on an idea (of how to obtain FTC's) that Farrell Becker shared with many of the TEF™ licensees at the 1980 L.A. AES.

Through using the TEF™ test method for awhile, I've developed the following format for obtaining high resolution in "Frequency Time Curves." It utilizes three frequency scales and a lot of manual tuning. It is imperative that you have a stable frequency generator, such as the HP3325A.

In order to obtain stable low end measurements, we find that it is necessary to slow down the speed and narrow the total bandwidth. The data obtained is readily understandable when plotted on a log vs. frequency graph but requires us to vary the linear frequency resolution points as we climb in frequency. Another factor that seemed desirable was ease of determining where on the frequency scale the test was at so we limited ourselves to points either on a grid mark or directly in between two grid marks. The resolution points used are as follows:

Measurements @ every 250Hz from 500 to 3000Hz
Measurements @ every 500Hz from 3000 to 7000Hz
Measurements @ every 1000Hz from 7000 to 20,000Hz

The test run is started with the 3580 analyser at the following settings:

Resolution	3Hz
Freq. Span/Div.	.5KHz
Sweep Time	.5Sec/Div.
Amplitude	1 dB/Div. log

All other parameters are at those recommended for ETC measurements.

We manually vary the offset of the synthesizer until we find the maximum amplitude response of the signal at the particular resolution point we are tuning for. Then the offset is listed on a data sheet that is set up as the copy enclosed. The formula for calculating the offset in time is as follows:

$$\frac{\text{Frequency Offset}}{\text{Sweep Rate}} \times \text{Velocity of Sound} = \text{Distance}$$

1.13 ft. = 1000 microsec.

For the next step in the measurement we change the Freq. Span/Div. to 1KHz and continue as before. The third and final section of the measurement increases the frequency span out to 20,000Hz by changing the Freq. Span/Div. to 2KHz and the Sweep Time/Div. to 1 second. By extending both the time and frequency span by the same factor (two), the time scale does not change.

With all of the data taken we find the total offset in distance and use the shortest offset as our 0 reference point. At this point we find the differences in time between the reference point and all other points and convert them to time differences.

HORN: Date: 7/7/81 BY: G.E. Meeks

	Hz.	OFFSET	DIFFERENCE	IN FT.	IN MICROSEC.	VARIANCE
SR 1360	500					
	750	997.39	2.63	2.972	2630	1370
	1000	997.41	2.59	2.927	2590	1330
	1250	997.50	2.50	2.825	2500	1240
	1500	997.62	2.38	2.689	2380	1120
	1750	998.74	1.26	1.424	1260	0
	2000	997.61	2.39	2.701	2390	1130
	2250	998.33	1.67	1.887	1670	410
	2500	998.05	1.95	2.204	1950	690
	2700	998.24	1.79	1.989	1760	500
	3000	997.81	2.19	2.475	2190	930
	3500	998.16	1.84	2.079	1840	580
	4000	998.20	1.80	2.034	1800	540
	4500	998.23	1.77	2.000	1770	510
	5000	998.11	1.89	2.136	1890	630
	5500	995.94	4.06	2.294	2030	770
SR 2000	6000	995.99	4.01	2.266	2005	745
	6500	996.10	3.90	2.204	1950	690
	7000	995.95	4.05	2.288	2025	765
	8000	996.00	4.00	2.260	2000	820
	9000	995.84	4.16	2.350	2080	860
	10000	995.76	4.24	2.396	2120	940
	11000	995.60	4.40	2.486	2200	
	12000					
	13000					

*"*Since the phase velocity is a function of frequency, the exponential horn is a dispersive medium for sounds of different frequencies.*" *FUNDAMENTALS OF ACOUSTICS, Kinsler and Freys, Second Edition, 1962, page 277.* (This was called to my attention by Robert Hagenbach of Indianapolis.)

Continued next page....

The shortest delay becomes the 0 reference point on a log frequency scale vs. time grid. Towards the bottom of the grid means a shorter delay and towards the top means a longer delay.

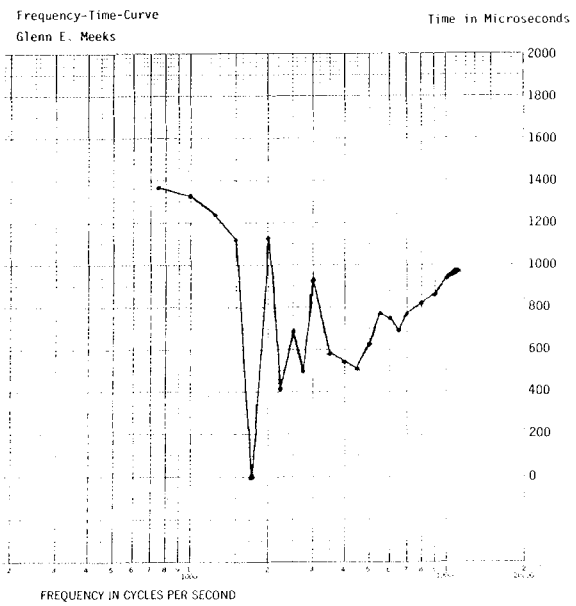

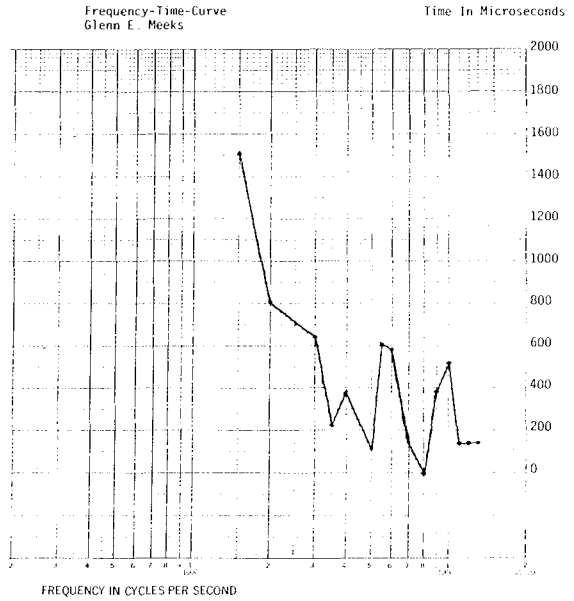

Looking at the FTC of these two horns could make one cringe very quickly. The foremost application of FTC measurements would seem to be determining if a horn could be time-aligned. By that I mean that if the FTC of a horn is not linear in the crossover range, you could not effectively align it to other devices.

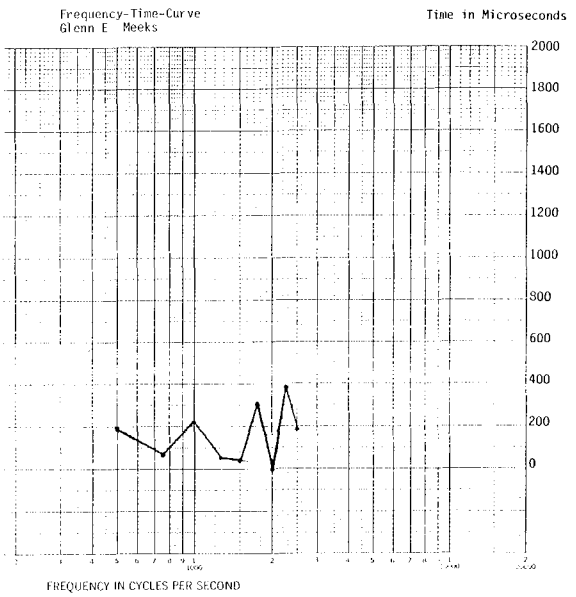

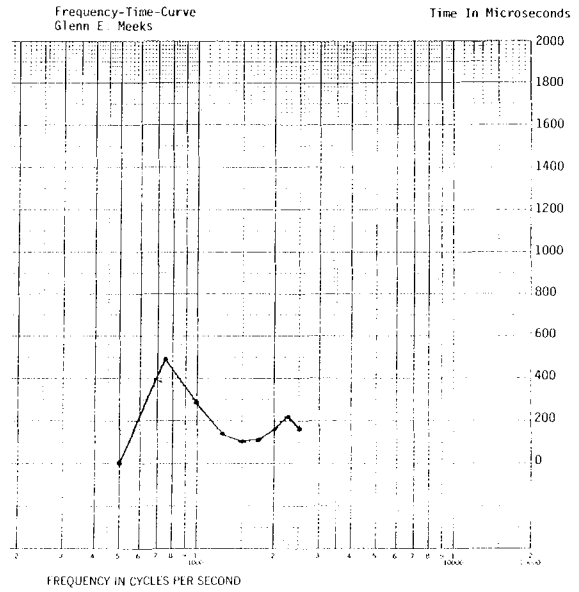

CHIPS DAVIS brought to my attention that it is necessary to measure the speed of sound to obtain absolutely correct measurements. The reasons are that the temperature, altitude (barometric pressure), and humidity (at higher frequencies) will affect the speed of sound and thus affect our true time scales. When we work with small distances (1/4 inch equals 20.88 microseconds @ 1132ft/s), small changes in the speed of sound could adversely affect the measurement's accuracy.

ORLANDO CLASS

DIFFUSION vs ABSORPTION

Many acoustical designers tend to think only of absorption when they wish to lower the level of a reflection. In many cases redirection of the reflected energy to new directions better serves the need without having to turn the energy into heat.

If I have a 4 ft^2 surface returning a certain level of acoustic energy back to a given position and I bend the surface so that only 2 ft^2 now return energy to that position, the level will change by

$$10 \text{ Log } \frac{2ft^2}{4ft^2} = -3.01 \text{ dB}$$

In the photograph Ken is holding a diffuser-specular reflector* (a plastic wedge) in front of a flat plywood panel. The top trace in the second photograph is the reflection from the flat plywood panel. The bottom trace is the reflected energy back to the microphone when the reflector is present. The change in level is 10 dB (it would take an absorber with an absorption coefficient of 0.90 to do the same).

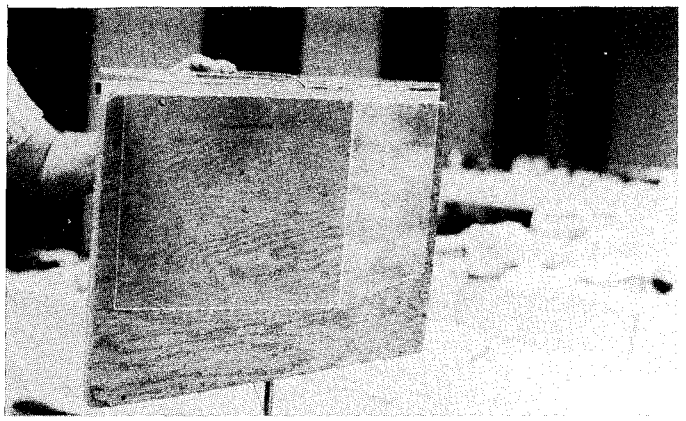

A plastic wedge diffuser-specular reflector on a flat plywood panel.

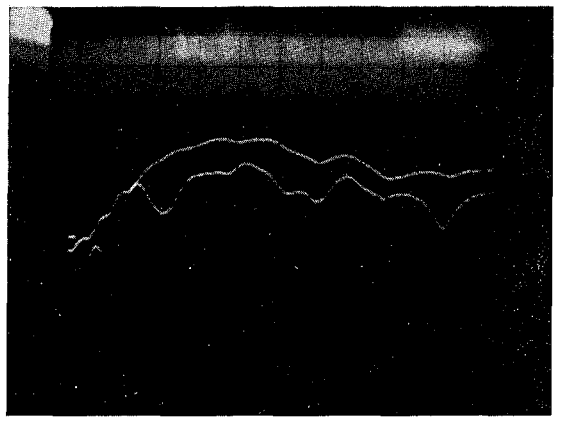

The top trace is the reflection from the plywood panel. The bottom trace is the reflected energy. The level change is 10 dB.

This means that the proportion of area on the reflector returning energy to the microphone is

$$10 \text{ Log } \frac{A_R}{A_T} = -10 \text{ dB} \qquad \text{or} \qquad \frac{A_R}{A_T} = 10^{\left(\frac{-10}{10}\right)}$$

and if A_T (area total) is made unity, then A_R (area reflection) $= 10^{\frac{-10}{10}} = 0.1$ of the total area.

Remembering that just as absorption is frequency dependent so is diffusion and specular reflections but with this advantage: Once you are above the frequency (less than the wave length) where diffraction rather than reflection occurs, the results are then essentially independent of frequency from that frequency upwards.

It is our opinion that a logical order of design criteria for acoustics becomes:

1. Establishment of a proper initial time delay gap
2. Configuration of subsequent early reflected energy into properly spaced packets based on Kuttruff's data with the levels of these energy packets adjusted by diffusion and specular reflections rather than absorption
3. Establishment of a truly exponential high density, low level reverberant field wherever the total internal volume of the room allows it to develop a level above the ambient noise level

We are increasingly coming to believe that excessive use of absorption (especially in larger volume spaces) leads to undesirable temporal gaps in the exponentially decaying reverberant field that are audible and annoying.

*Specular (mirror like)

The wedge is a diffuser at frequencies where its width is one wave length and its depth is 1/4 wave length (i.e., the 400 Hz octave band). It is a specular reflector above that frequency.

QUOTES

From *Audio* magazine, January 1982, quoting from Bert Whyte's "Behind the Scenes":

> "Like all of the Acoustat speakers, the Model Four is a dipole radiator. I have used them positioned well away from a panelled wall, with good results as to imaging and depth, but when I placed them in my Sonex-treated 'live end/dead end' listening room, the absorption of the back wave was quite an aid. Such treatment with this sound absorber removes most first-order reflections and damps the back wave, so with no reflections arriving later in time, there is a dramatic increase in imaging and depth perception as well as more precise localization of orchestral instruments."

* * * * * * * * * * * * * * *

GLEN BALLOU sent us a quote taken from a speech by Igor Sikorsky for young engineers:

> "In the course of your work, you will from time to time encounter the situation where the facts and the theory do not coincide. In such circumstances, young gentlemen, it is my earnest advice to respect the facts."

* * * * * * * * * * * * * * *

From *Idea Bank Letter* published by The Fails Management Institute:

> "SELLING AND MARKETING -- WHAT'S THE DIFFERENCE? The terms 'Marketing' and 'Selling' are not standard words in the contractor's vocabulary - yet. As a consequence, they are often misused, perhaps because they are misunderstood. Let's discuss the difference:
>
> > "Marketing is the adaptation of a contractor's capabilities to customer need. Selling is the end product of marketing. Thus, marketing must occur prior to selling. In that sense, marketing is future tense, focusing on all customers and all potential customers. It is a process that is on-going and is a representation of the entire organization.
> >
> > "Selling, on the other hand, is present tense, focusing on one customer at one specific time, and it is a representation of one particular person of the organization."

* * * * * * * * * * * * * * *

From *E.A.RLOG* by Elliott Berger in "Motivating Employees to Wear Hearing Protection Devices":

> "An alternative method of clearly relating an employee's hearing loss to his own personal noise exposure is to ask him to set the volume of his car radio to a *just audible level* upon arriving at work. He should then turn off the ignition, leaving the volume untouched. After returning to his car for the trip home, he should carefully listen to see if he can still hear the radio. If he cannot, this is evidence that his ears have been fatigued by the day's noise exposure."

* * * * * * * * * * * * * * *

From *Journal of the Acoustical Society*, December 1981, in a review of "Effects of Impulse Noise on Hearing: Proceedings of the International Symposium - August 25-27, 1980":

> "Several speakers made the point that imp (the newly coined word to embrace both impulses and impacts) noise tended to produce a loss centered at 6 kHz while steady noise resulted in the greatest loss at 4 kHz. (Dixon Ward) opined that industrial data are unlikely ever to tell us much about the development of hearing loss because *the problem of an appropriate control group is near insuperable*." (Italics mine)

Editor's Note: The point we often make in class is that we can attempt to control the noise level at work and keep a record of his noise exposure, but how do we know what the worker does in his spare time with ham radio, 2-cycle motor bikes, chain saws, and any highly impulsive noise? As Dixon Ward says, the problem is insurmountable in a free world.

SMILE

BRUCE THAYER sent us "Murphy's Laws of Computerdom" which listed as its LAW #1: No major computer application is ever installed on time, within budget, with the same staff that started it, nor does it do exactly what it is supposed to do.

Bruce added a corollary based on his work in audio: "If a device is modularized, the problem will not be on a module."

DE FACTO DIGITAL STANDARDS

Digital audio equipment manufacturers have, according to *Audio Times* and *Pro Audio*, agreed upon de facto standards for digital sampling rates. This alleged agreement is said to have been reached during the fall AES Convention in New York City.

The so-called professional sampling rate, 48 kHz, and the consumer sampling rate, 44.1 kHz, were declared to be "the real start of the digital audio age" by Dr. Toshi T. Doi of Sony.

Syn-Aud-Con's opinion is that if these de facto standards were ever to become official, it would signal a dark age of audio in which precious copies of earlier analog recordings would become collector's items among those who love music. We sincerely hope that some manufacturer is quietly solving the problems being so glibly swept under the rug by the digital advocates.

When Dr. Doi and his cohorts finally realize that they can't shove a premature digital standard down the listener's throats with any more success than with Quad, then just maybe waiting in the background will be IBM or Bell with a high quality, low distortion, musically pleasing digital recording and playback system.

Digital is the wave of the *future*, with the emphasis on future. Right now it is the rag doll of the market exploiters. Let it be a victimless crime.

COMMENTS ON DIGITAL

From *Studio Sound*, November 1981, "The Digital Dilemma" by Prof. P. B. Fellgett:

> "The trouble is that 'digital' is being sold to the public not for what it is but for the name, like hot pants or shocking pink. If the actual merit matches the name, no harm is done, but otherwise the industry is setting a snare for its own foot. You cannot fool all the people for very long, and sooner or later there will be a backlash against any fashion which claims more than it can deliver. .....Indeed, there are already signs of a backlash against the supposed 'unmusicality' of digital sound. .....Thus, the three essential steps of filtering, sampling and the digitising itself all need to be done better than at present, and at least two of them better than we know how to do at the present. There is still a long hard path ahead, and as always in audio the final result will depend not only on the engineering specification achieved but also on the audio perceptions and musical sensitivity of the designer."

From *Pro Sound News*, December 1981, from an interview with Dr. Willi Studer:

> "We are also getting pressure from some of our customers to come out with a PCM recorder fast. Still, it is our opinion that there is no product on the market that is good. And the reason for that is that there are no A to D, D to A converters in those machines that are reasonably good in quality. It is not the PCM technology as such. It is just the converters that are not adequate at this point."

From *MIX* magazine, November 1981, in an interview with Bill Robinson who has recently retired from 30 years in the recording studio:

> "I think that there are three things wrong with digital right now. In my opinion there is a high frequency distortion, there is the lack of compatibility, and the price is too high. However, some of the records that I have heard that have been done digitally are very fine sounding records even with the high frequency distortion."

From *Business Week*, November 30, 1981, in an article discussing the sorry condition of the recording industry, which they attribute to the fact that the typical rock buying public has shifted its interest to video games and has little money or interest in records:

> "A big unknown is whether new technology -- *such as audio-perfect music produced by digital record-players* (italics mine) will sometime give the record industry the lift it needs. Retailers, however, now are fighting one musical breakthrough -- the Home Music Store which would allow consumers to tape digitally produced music that is fed into a decoder box via cable and translated into sound that is *100 times better than FM radio*. (Italics mine) The Washington, D.C., based company hopes to offer the service in five test markets for a monthly fee of $10 beginning next April.

SMILE

DAN SVEZIA in our St. Louis class told us about calling for an inspection of electrical wiring he had done in his home. The inspector came, asked for the check and started to leave. Dan asked the inspector if he was going to check it. The inspector took the check out of his pocket, glanced at it and said, "It looks all right to me."

SBA UPDATE

Many Syn-Aud-Con graduates are now working with Heyser's Signal Biasing Amplification system which is manufactured by J. W. Davis & Company in Dallas. David Culp of Dallas has installed a noise masking system in a 16 floor office building. A 900 speaker system has been put in a hospital. Additional innovative uses of the SBA that we have heard of:

1. Distributed system in church social halls
2. Pew back system for choir as an addition to system for the rest of the church
3. Headset monitor system for recording studio
4. Theater monitoring and call system for dressing rooms, green rooms and backstage
5. Distributed systems for board and conference rooms

DON'T USE SOFT SUSPENSION SPEAKERS

SBA rapidly gets into trouble when the installer uses high priced "long throw" loudspeakers. The DC current being stored in the loudspeaker drives the voice coil in such "soft suspension" loudspeakers out of the gap. SBA works best when used with relatively inexpensive loudspeakers with "stiff" suspensions and these inexpensive units sound to the listener as if a much more expensive unit was being used at a *much* higher power setting. SBA systems can be compared to low cost 70 volt systems only in price. Quality-wise the comparison has to be against premium professional products worth *many* times the cost of the SBA system.

WIRE SIZE IMPORTANT

Use of too small wire has been another way to get a SBA system into trouble, especially the common return line.

RF

Finally, alas, R.F. can penetrate a SBA system given the opportunity. J. W. Davis & Company has their new engineering personnel working on this in the field and we hope to publish more detail on this in the near future. This problem is not prevalent but when it does occur it is devastating.

As we caution in the classes, try out some small sample SBA systems first. Those who have tried these systems as suggested and grown step by step as experience was gained have had extremely successful and exceptionally high quality at surprisingly low costs.

To list a few of the advantages of SBA:

1. No transformers
2. No power amplifiers
3. No racks, cooling equipment, heavy cable, etc.
4. No need to calculate line losses, impedances or levels
5. No engineering time for initial installation, expansion, or contraction of sound system
6. Versatility of system control
7. Only three low cost, easy-to-stock modules required to service any size system
8. High fidelity quality system

THE EFFECT OF A HEAVY METAL SPEAKER GRILL

DAN PROSSEDA, in our New York class, wanted to see the effect of the heavy metal grill of a Soundolier grill on the response of an Altec 409-8D.

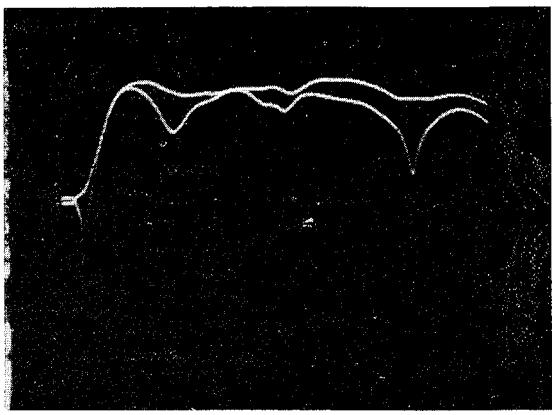

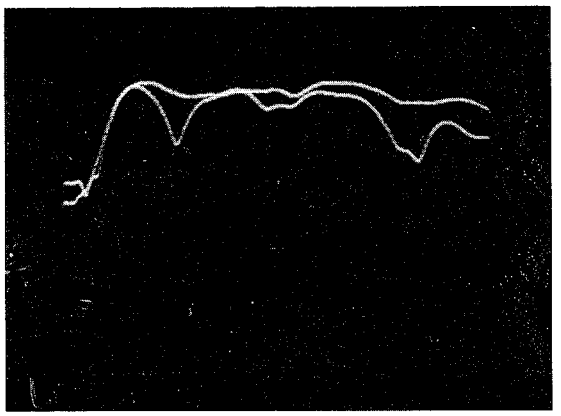

The top trace is of the Altec 409 in the Soundolier box without the grill, and the bottom trace is the response of the 409 with the grill in place.

VOICE WARNING HORNS

Community Light & Sound produces some special multi-throated 45° horns capable of producing exceptionally high sound power levels. The photographs shown here are of horns produced for the Whelen Engineering Company. Those of you interested in further information on such horns should contact:

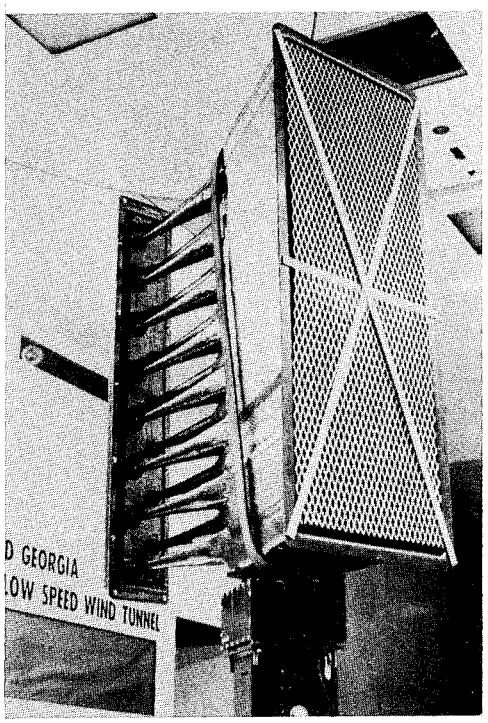

Community Light & Sound
5701 Grays Avenue
Philadelphia, PA 19143
(215)727-0900

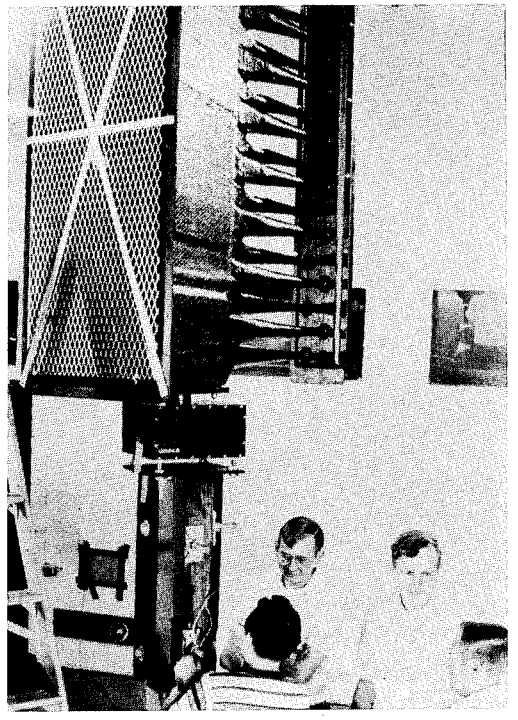

LOUDSPEAKER SENSITIVITY VS LOUDSPEAKER EFFICIENCY

When a manufacturer provides an output rating for a loudspeaker, it is always in sound pressure *level* (L_p) measured at some reference distance (usually 4 feet). Such measurements are called loudspeaker sensitivity ratings.

It is important to note that loudspeaker *sensitivity* ratings *do not* provide efficiency data either absolute or relative. The sensitivity rating is the highest, usually on axis, sound pressure level developed within the loudspeaker's coverage at the reference distance.

A loudspeaker's efficiency rating is the ratio of the acoustic power produced by the loudspeaker to the electrical input power at the loudspeaker's terminals. Almost all sensitivity measurements use 1 watt as the electrical input power. (This is usually not one actual watt but the voltage that, across a resistor with a value equal to the loudspeaker's nominal impedance rating, would equal 1 watt.) And we know that one electrical watt fully converted to one acoustic watt equals approximately 107.3 dB* *if* the loudspeaker is omnidirectional (a directivity factor, Q, equal to one). This knowledge allows us to write the following formula for converting the 4', 1w, sensitivity rating into an efficiency rating:

$$\left\{100\ 10\ \mathrm{EXP}\left[\left((L_{psensi} - 10\ \mathrm{Log}\ Q) - 107.3\right) / 10\right]\right\}$$

*For 1 watt, 1 meter, Q = 1 (109.0 dB)

The figure (L_{psensi} - 10 Log Q) tells you how many dB below 100% you are. Since a 20 dB *power* ratio is 100/1, then a loudspeaker with a (L_{psensi} - 10 Log Q) = -20 would be 1% efficient and one 3.01 dB higher in level, that is (-20 + 3.01) = 16.99 dB below 100%, would be 2% efficient.

In our judgment, a majority of writers on loudspeakers and loudspeaker systems do not recognize this fundamental difference between sensitivity and efficiency and this results in the misdesign of their crossover networks to "balance" what they think is a higher power output from a tweeter when actually the acoustic power from the tweeter is lower than the acoustic power from the woofer *even though their sensitivity ratings suggest the reverse.*

HIGHLY ADVERTISED PREMIER LABEL IMPORTED LOUDSPEAKER

It's hard to beat being on the road for encountering new acoustic problems. During one class in the East, one of the participants brought in some Hi Fi loudspeakers he had abroad (see Fig. #1). The response of this system is shown below (see Fig. #2).

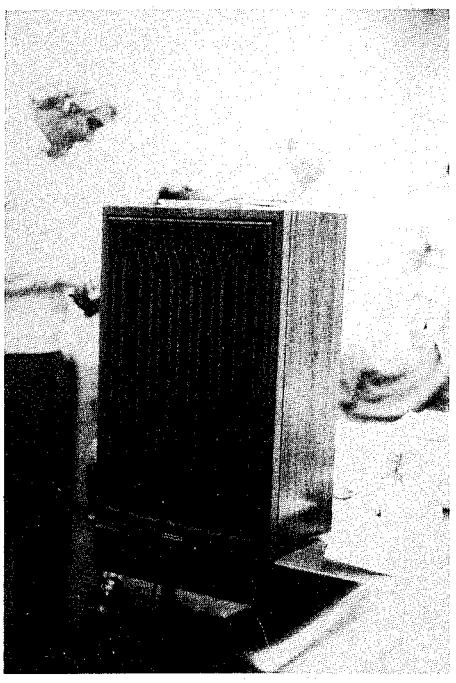

FIGURE NO. 1

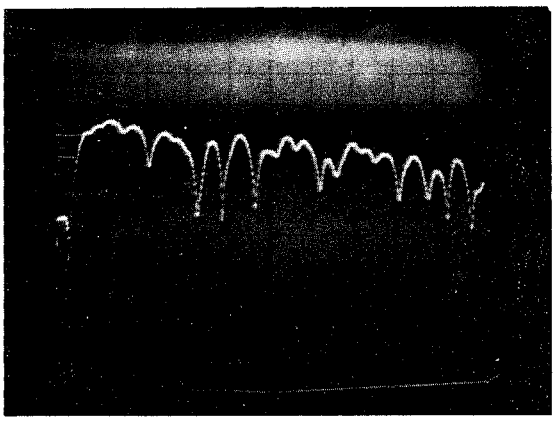

FIGURE NO. 2

The cause of the high frequency "comb" filters is the grill (no doubt a real sales plus to the decor minded). (See Fig. #3) The mid-range "comb" filters are the result of a misaligned mid-range driver and tweeter minus a full crossover network.

As if that weren't enough, the tweeter was connected to the mid-range output from the crossover network and the mid-range driver was driven by the tweeter output from the network. An impedance test revealed that the dual ducted ports did nothing whatsoever but were apparently decorative only.

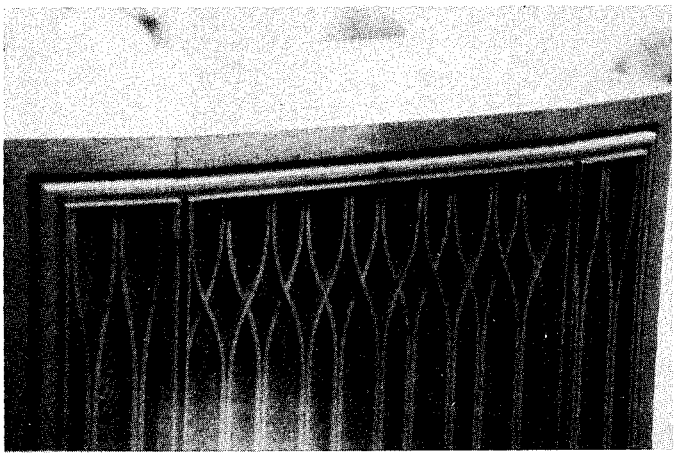

FIGURE NO. 3

While we, in general, agree with the philosophy of "buy the loudspeaker that sounds best to you," this quality of product cautions us to continue to use measurements as a quick double check.

COMPENDIUM OF MATERIALS FOR NOISE CONTROL

Compendium of Materials for Noise Control is the extremely useful volume that we first recommended in Newsletter Volume 4, No. 1 (1976). It is the same excellent publication but with new order numbers and price. The Illinois Institute of Technology Research Institute under the direction of W. Ernest Purcell performed the work involved in this remarkably useful 341 page (8-1/2 X 11" format) book. (W. Ernest Purcell is the author of the splendid article in *Sound & Vibration* reviewed in this Newsletter.)

In addition to a very well-written section on acoustic basics, it lists acoustical laboratories, manufacturers of acoustical materials and their addresses, all types of materials - glass, folding partitions, sound absorbing concrete blocks. There are sections of the book composed of Tables: sound absorption materials, sound absorption systems, sound barrier materials, composite system for sound absorption and transmission reduction, sound barrier systems, and specialized items. This is *THE* source book for everyone who ever asked, "Where can I get a set of absorption coefficients?" The book meets a real need of the professional sound engineer and belongs in his library.

DHEW (NIOSH) Publication No. 80-116. Stock #017-033-00359-9. U. S. Government Printing Office, Superintendent of Documents, Washington, D.C. 20402. Ph 202-783-3238. Our most recent order (1/9/82) cost $9 per copy.

ARTICLES OF INTEREST

As we have indicated in the past, the articles by W. Ernest Purcell in *Sound and Vibration* magazine constitute one of the best texts for self-instruction in acoustic treatment and materials we are aware of. Purcell originally published his "Materials for Noise and Vibration Control" in the July 1976 issue of *Sound and Vibration*. His latest article entitled "Systems for Noise and Vibration Control" appears in the August 1981 issue of *Sound and Vibration*. If you don't receive this magazine, you should. A letter on your professional letterhead will bring a free subscription.

Sound & Vibration
P. O. Box 40416
Bay Village, Ohio 44140

FREE MAGAZINE SUBSCRIPTION

Test & Measurement World is circulated, without charge, to managers, engineers, supervisors and company executives responsible for the selection, specification, recommendation, authorization or cost justification for purchases of equipment, services and software used for test, measurement, characterization, evaluation, quality assurance, reliability, quality control and related support functions in OEM and end-user industries around the world. Write *Test & Measurement World*, 215 Brighton Avenue, Boston, MA 02134.

CLASSIFIED

EMPLOYMENT OPPORTUNITY: Acoustical Design Engineer with sales experience. Position now available to assist dealers in the development of sales with Klipsch Industrial Products. Specific interests in professional sound reinforcement a definite plus. Please send resume', salary history and requirements along with industry references to: Chuck Mulhearn, Klipsch & Associates, P. O. Box 688, Hope, AR 71801.

* * * * * * * * * * * * * * *

EMPLOYMENT OPPORTUNITY: TOA is currently interviewing for the position(s) of regional managers in the various marketing regions of the United States. Contact Terry Green, Sales Manager, TOA Electronics, Inc., P. O. Box 2047, South San Francisco, CA 94080. Ph. 415/588-2538.

* * * * * * * * * * * * * * *

EMPLOYMENT OPPORTUNITY: Additional personnel needed for growing company. Telco, PBX, DP, or network experience desired. Will train to operate and maintain long distance network facility. Excellent opportunity. Contact Bruce Thayer, Teleconnect Company, 2037 North Towne Lane NE, Cedar Rapids, IA 52402.

* * * * * * * * * * * * * * *

WANTED: General Radio Model 1382 noise generator in good condition. Chris Hood, 5 Harrison Street, Crafton, PA 15205. Ph (412)921-4357 or 921-2911.

INDUSTRIAL RESEARCH PRODUCTS, INC.
A Knowles COMPANY

EMILAR CORPORATION

UE QUALITY OF COURSE

SYN-AUD-CON SPONSORS

Syn-Aud-Con receives tangible support from the audio industry, and ten manufacturing firms presently help underwrite the expense of providing sound engineering seminars. Such support makes it possible to provide the very latest in audio technology while maintaining reasonable prices relative to today's economy and to provide all the materials and continuing support to all graduates of Syn-Aud-Con.

Personnel from these manufacturers receive Syn-Aud-Con training which provides still another link in the communications circuit between the ultimate user and the designer-manufacturer of audio equipment. They are "in-tune" with what a Syn-Aud-Con graduate needs.

Their presence on this list as a Syn-Aud-Con sponsor indicates their desire to work cooperatively with you in professional sound.

United Recording Electronics Industries
HME
Shure Brothers, Inc.
Sunn Musical Equipment Company
Crown International, Inc.
Emilar Corporation
Rauland-Borg Corporation
Community Light & Sound, Inc.
Industrial Research Products, Inc.
TOA Electronics, Inc.

UNITED RECORDING ELECTRONICS INDUSTRIES

HM ELECTRONICS, INC.

TOA ELECTRIC CO., LTD.
KOBE JAPAN

SHURE BROTHERS INCORPORATED

EMILAR CORPORATION

COMMUNITY LIGHT & SOUND, INC.

RAULAND-BORG CORPORATION